DRAWINGS PREPARED
SEROTONIN - ST. PETERSBURG
125 2ND AVENUE NORTH
ST. PETERSBURG, FL. 33701

HDG
HEIRLOOM DESIGN GROUP, LLC

LAMINATE SCHEDULE

PL-01	WILSONART / D354-60 / DESIGNER WHITE
PL-02	WILSONART / 8214 / PHANTOM CHARCOAL
PL-03	WILSONART / 6255 / POLISHED GOLD ALUMINUM
PL-04	WILSONART / 5010K-07 / DRAMA MARBLE
PL-05	WILSONART / Y0704-38 / CRIMINI WALNUT

SOLID SURFACE SCHEDULE

SS-01	MEGANITE / MT VANCOUVER / M002
SS-02	MEGANITE / ENCHANTED ROCK
SS-03	CORIAN / ANTARTICA
SS-04	CORIAN / DESIGNER WHITE

HARDWARE SCHEDULE

H-1	Blum 105° concealed hinges
H-2	Knapp & Vogt Spoon Pins
H-3	Richelieu / BP8160128160 / Satin Brass / 6 3/8"
H-4	Pro Series 100 full extension slides
H-5	Richelieu /61432171 /Stainless Steel grommet
H-6	Rev-A-Shelf / RV-814PB-11-5 / Pull Out / White
H-7	Blum Push To Open Mechanism
H-8	Richelieu / 9004430 / White Grommet
H-9	Richelieu / 9004490 / Black Grommet
H-10	Mockett / B-2620 / Oval Grommet White
H-11	Rev-A-Shelf / RV-15PB-2-S / Pull Out / White
H-12	File Hanging System FOR Wood Drawers
H-13	Cabinet Locks
H-14	Black Metal 1" Pipe and Flange

JOB NOTES

CABINET GRADE	PLASTIC LAMINATE FACED / AWI CUSTOM
PART	**INSTRUCTION**
CABINETS & SHELVES	3/4" Plywood W/ Liner White
CABINET BACKS	1/2" Plywood W/ Liner White
DRW & DOOR FRONTS	3/4" MDF Core Door Board
DRAWER BODIES	1/2" Plywood W/ Liner White
DRW CONSTRUCTION	Butt jointed glued mechanically fastened w/ staples
HINGES	Blum concealed hinges 120°
CABINET INTERIOR FINISH	White Liner
CABINET EXTERIOR FINISH	As Shown Per Elevation
EDGE BANDING	Vinyl To Match Finish
DOOR & DRW EDGE	Vinyl To Match Finish

CONTENTS

CS	COVER SHEET
100.0	RECEPTION DESK
100.1	RECEPTION DESK
100.2	SECTION AND DETAILS
100.3	RETAIL STORAGE CABINET
100.4	HALLWAY SLATWALL DETAILS
101.0	RETAIL DISPLAY AND ISLAND
101.1	RETAIL DISPLAY SECTION AND ISLAND
101.2	SECTION AND DETAILS
101.3	SECTION AND DETAILS
101.4	SECTION AND DETAILS
102.0	TREATMENT ROOMS
102.1	SECTION AND DETAILS
102.2	SECTION AND DETAILS
102.3	SECTION AND DETAILS
103.0	NURSE STATION / DISPENSARY
103.1	NURSE STATION / DISPENSARY
103.2	SECTION AND DETAILS
104.0	BLOOD DRAW ROOM
104.1	SECTION AND DETAILS
105.0	BREAK ROOM
105.1	SECTION AND DETAILS
106.0	CONFERENCE ROOM
107.0	I.V. THERAPY

REVISIONS #

SEROTONIN St. Petersburg

DESCRIPTION
COVER SHEET

HEIRLOOMDESIGNGROUP
2770 Apopka Blvd, Apopka, FL 32703
Ph: (407) 735-2242
Web: www.heirloomdesigngroup.com

VETERAN OWNED BUSINESS

CHECKED

DATE
01/09/24

SCALE
AS INDICATED

SHEET
CS

LAMINATE SCHEDULE	
PL-01	WILSONART / D354-60 / DESIGNER WHITE
PL-02	WILSONART / 8214 / PHANTOM CHARCOAL
PL-03	WILSONART / 6255 / POLISHED GOLD ALUMINUM
PL-04	WILSONART / 5010K-07 / DRAMA MARBLE
PL-05	WILSONART / Y0704-38 / CRIMINI WALNUT

SOLID SURFACE SCHEDULE	
SS-01	MEGANITE / MT VANCOUVER / M002
SS-02	MEGANITE / ENCHANTED ROCK
SS-03	CORIAN / ANTARTICA
SS-04	CORIAN / DESIGNER WHITE

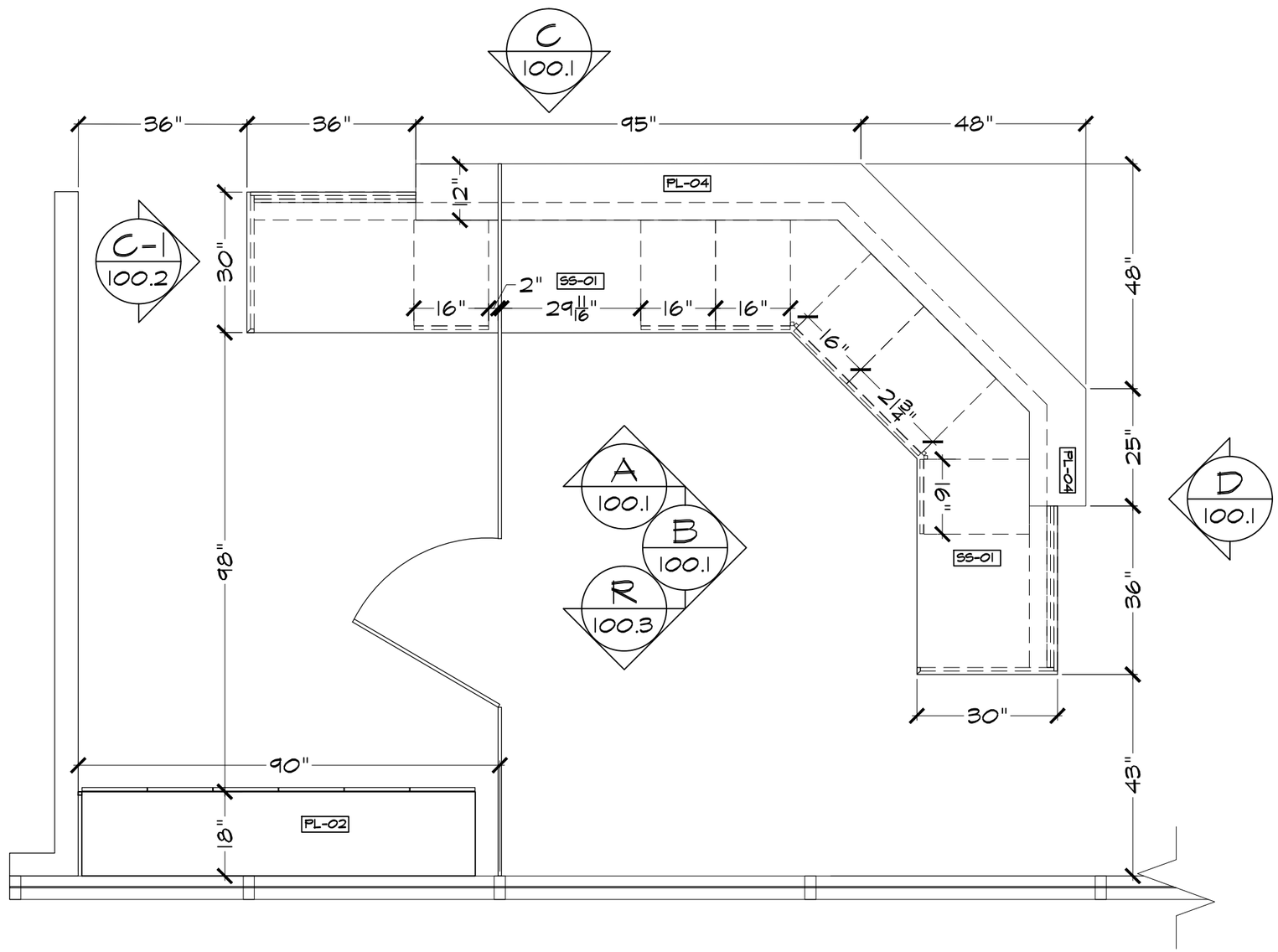

RECEPTION DESK PLAN VIEW

SCALE:3/8" = 1'-0" ARCH. REF: 1/A203

REVISIONS	#

SEROTONIN St. Petersburg

DESCRIPTION
RECEPTION DESK PLAN

HEIRLOOMDESIGNGROUP

VETERAN OWNED BUSINESS

2770 Apopka Blvd, Apopka, FL 32703
Ph: (407) 735-2242
Web: www.heirloomdesigngroup.com

CHECKED

DATE
01/09/24

SCALE
AS INDICATED

SHEET
100.0

LAMINATE SCHEDULE

PL-01	WILSONART / D354-60 / DESIGNER WHITE
PL-02	WILSONART / 8214 / PHANTOM CHARCOAL
PL-03	WILSONART / 6255 / POLISHED GOLD ALUMINUM
PL-04	WILSONART / 5010K-07 / DRAMA MARBLE
PL-05	WILSONART / Y0704-38 / CRIMINI WALNUT

SOLID SURFACE SCHEDULE

SS-01	MEGANITE / MT VANCOUVER / M002
SS-02	MEGANITE / ENCHANTED ROCK
SS-03	CORIAN / ANTARTICA
SS-04	CORIAN / DESIGNER WHITE

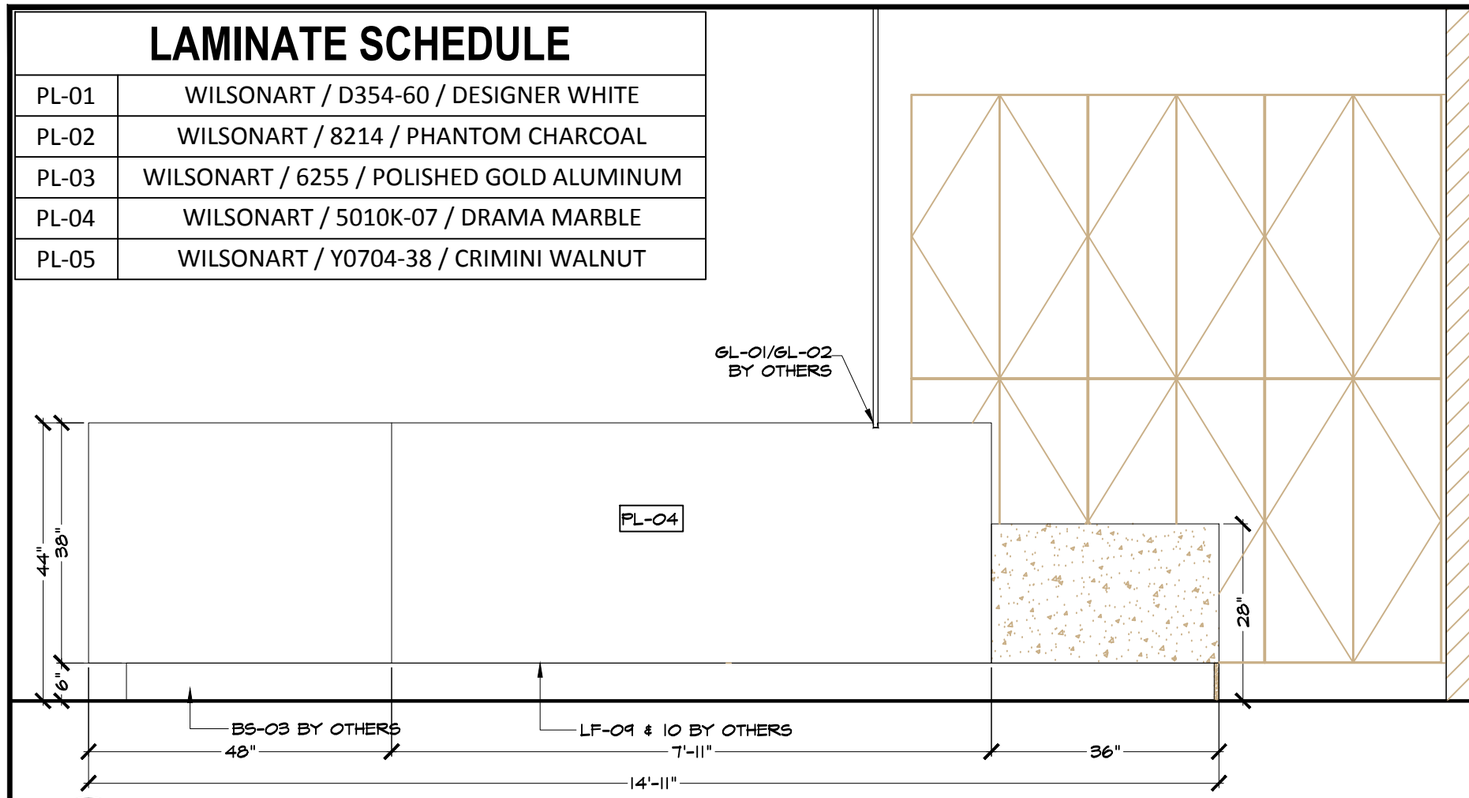

C RECEPTION DESK ELEVATION
SCALE:1/2" = 1'-0" ARCH. REF: 5/A203.1

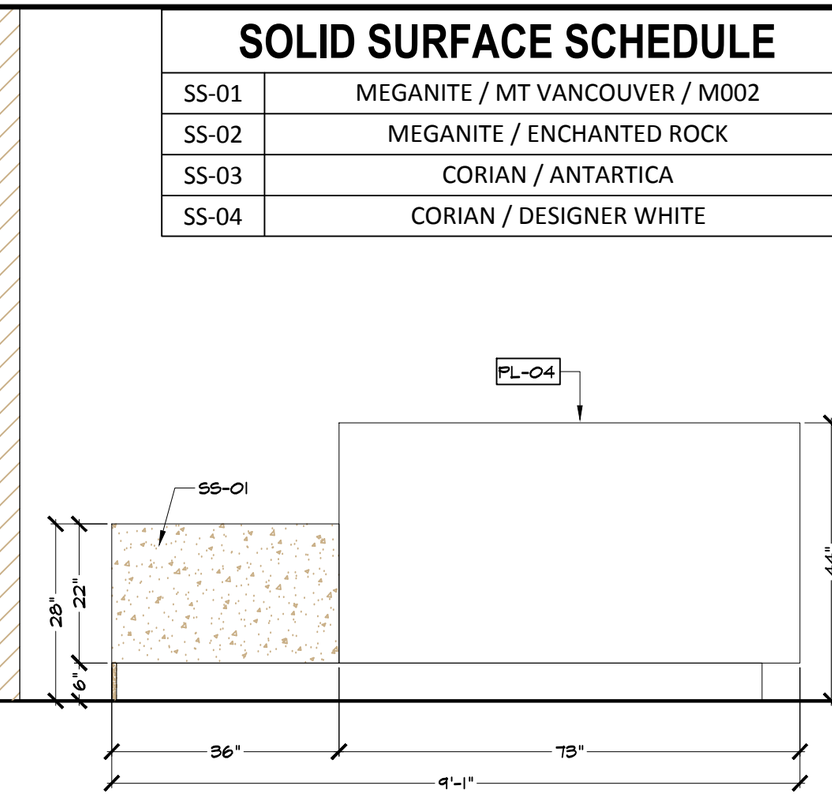

D RECEPTION DESK ELEVATION
SCALE:1/2" = 1'-0" ARCH. REF: 4/A203.1

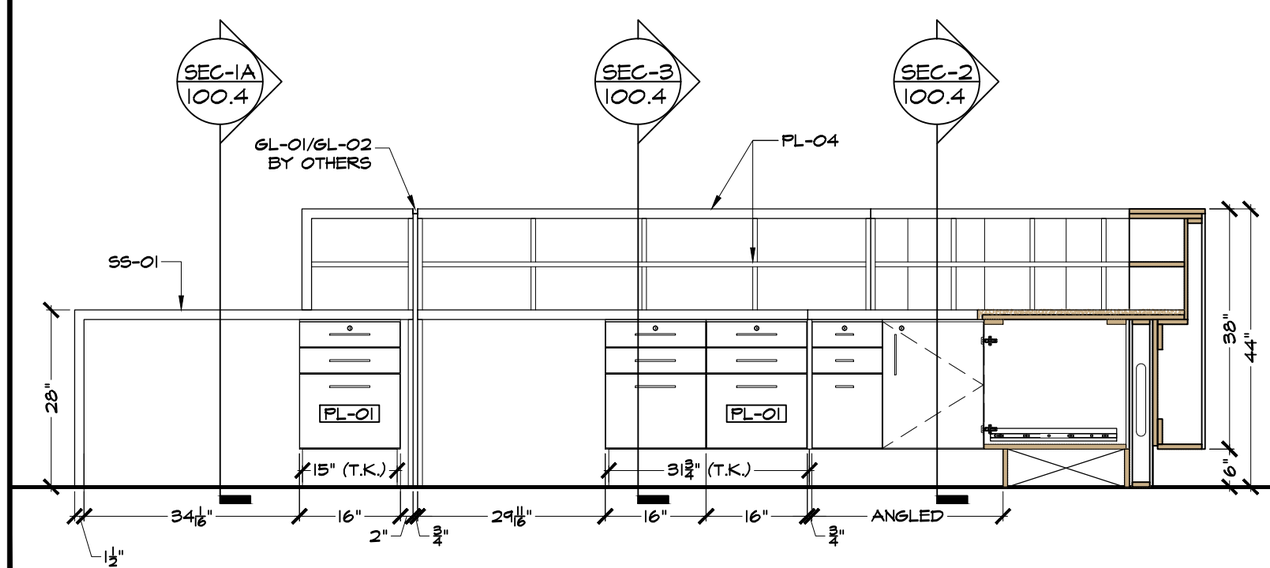

A RECEPTION DESK ELEVATION
SCALE:1/2" = 1'-0" ARCH. REF: 1/A203.1

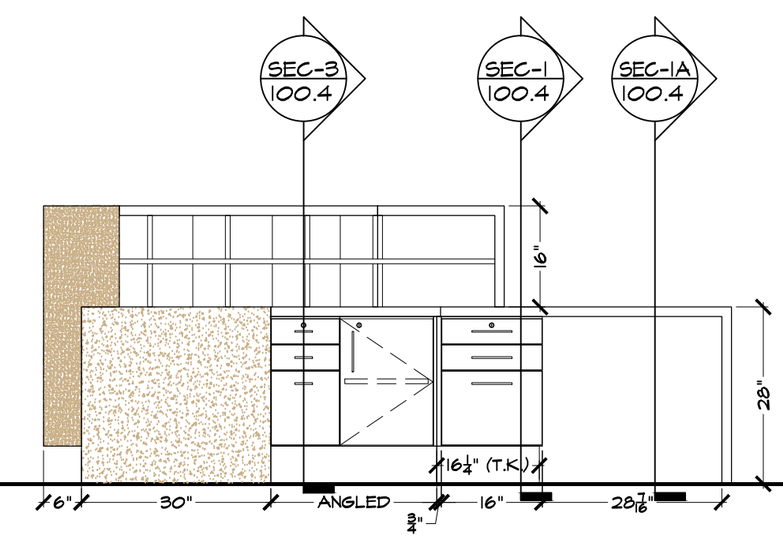

B RECEPTION DESK ELEVATION
SCALE:1/2" = 1'-0" ARCH. REF: 3/A203.1

REVISIONS	#

SEROTONIN St. Petersburg

DESCRIPTION
RECEPTION DESK ELEVATIONS

HEIRLOOMDESIGNGROUP
VETERAN OWNED BUSINESS
2770 Apopka Blvd, Apopka, FL 32703
Ph: (407) 735-2242
Web: www.heirloomdesigngroup.com

CHECKED

DATE
01/09/24

SCALE
AS INDICATED

SHEET
100.1

HARDWARE SCHEDULE

H-1	Blum 105° concealed hinges
H-2	Knapp & Vogt Spoon Pins
H-3	Richelieu / BP8160128160 / Satin Brass / 6 3/8"
H-4	Pro Series 100 full extension slides
H-5	Richelieu /61432171 /Stainless Steel grommet
H-6	Rev-A-Shelf / RV-814PB-11-5 / Pull Out / White
H-7	Blum Push To Open Mechanism
H-8	Richelieu / 9004430 / White Grommet
H-9	Richelieu / 9004490 / Black Grommet
H-10	Mockett / B-2620 / Oval Grommet White
H-11	Rev-A-Shelf / RV-15PB-2-S / Pull Out / White
H-12	File Hanging System FOR Wood Drawers
H-13	Cabinet Locks
H-14	Black Metal 1" Pipe and Flange

LAMINATE SCHEDULE

PL-01	WILSONART / D354-60 / DESIGNER WHITE
PL-02	WILSONART / 8214 / PHANTOM CHARCOAL
PL-03	WILSONART / 6255 / POLISHED GOLD ALUMINUM
PL-04	WILSONART / 5010K-07 / DRAMA MARBLE
PL-05	WILSONART / Y0704-38 / CRIMINI WALNUT

SOLID SURFACE SCHEDULE

SS-01	MEGANITE / MT VANCOUVER / M002
SS-02	MEGANITE / ENCHANTED ROCK
SS-03	CORIAN / ANTARTICA
SS-04	CORIAN / DESIGNER WHITE

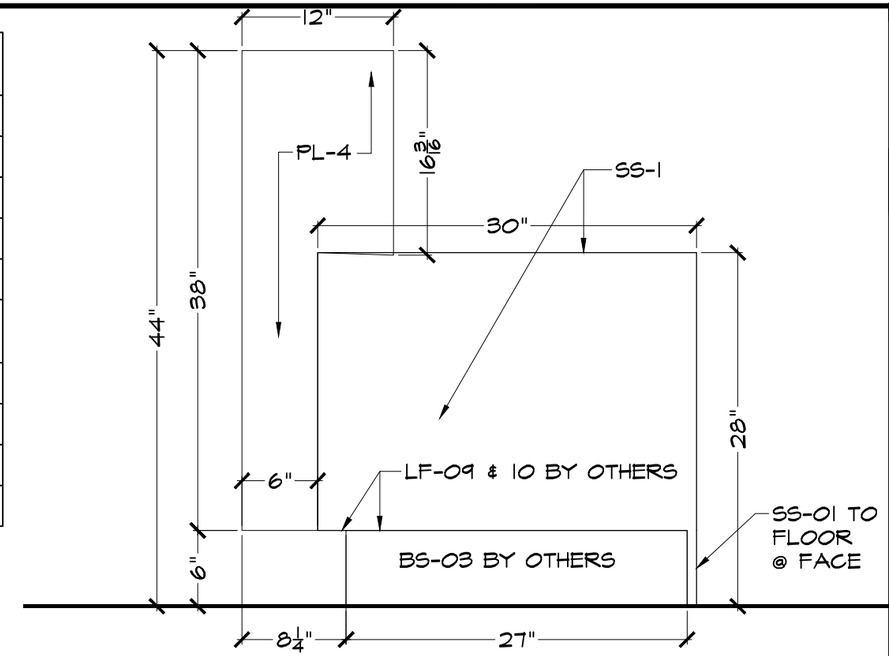

C-1 RECEPTION DESK ELEVATION
SCALE:1" = 1'-0" ARCH. REF: 2/A203.1

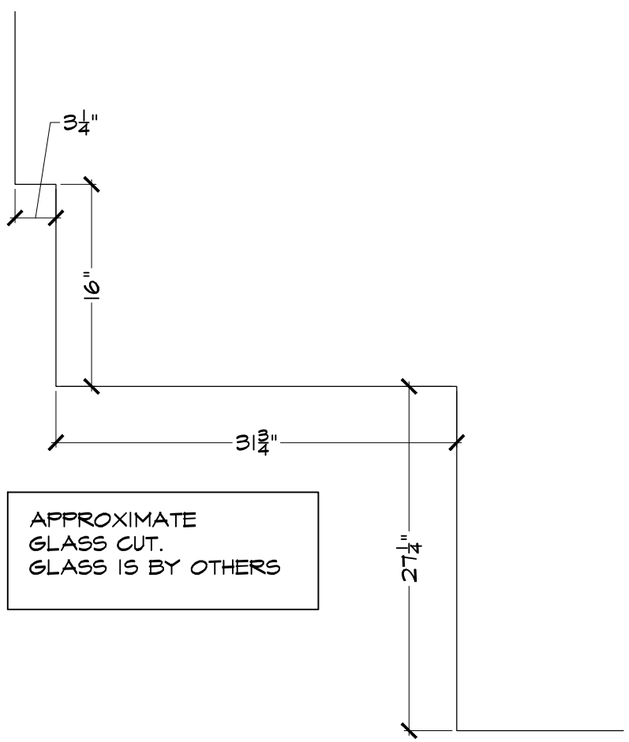

APPROXIMATE GLASS CUT.
GLASS IS BY OTHERS

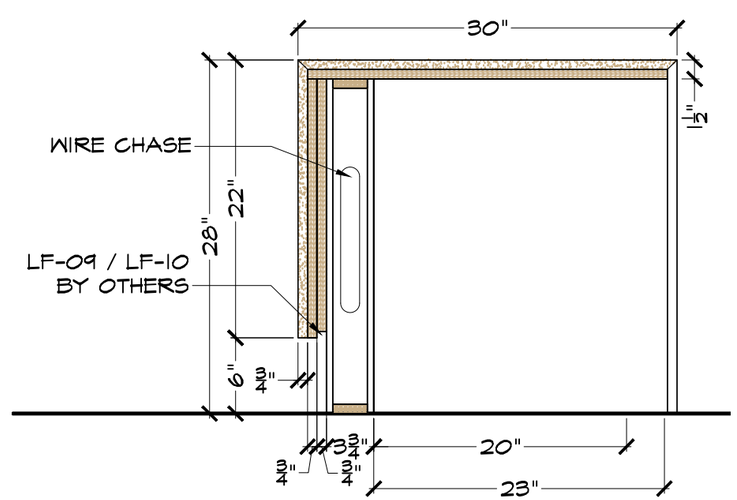

1A SECTION CUT
SCALE:1" = 1'-0" ARCH. REF: N/A

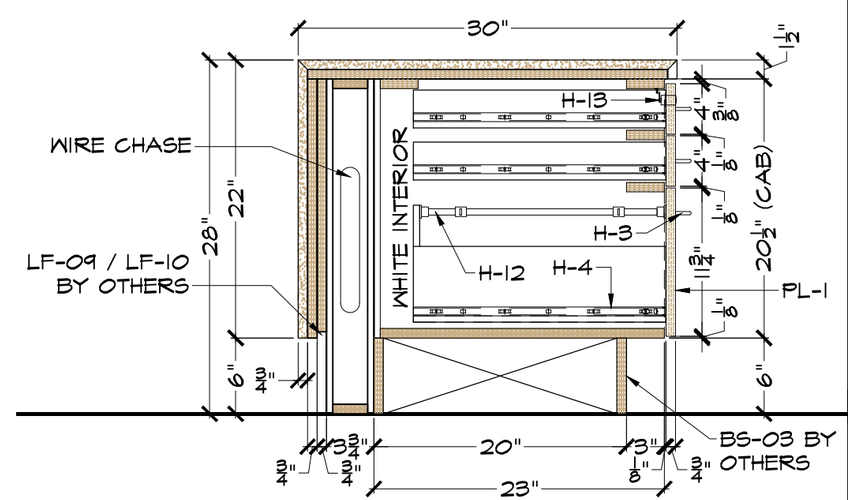

1 SECTION CUT
SCALE:1" = 1'-0" ARCH. REF: N/A

REVISIONS #

SEROTONIN St. Petersburg

DESCRIPTION
SECTIONS AND DETAILS

HEIRLOOMDESIGNGROUP
VETERAN OWNED BUSINESS
2770 Apopka Blvd, Apopka, FL 32703
Ph: (407) 735-2242
Web: www.heirloomdesigngroup.com

CHECKED
DATE 01/09/24
SCALE AS INDICATED
SHEET 100.2

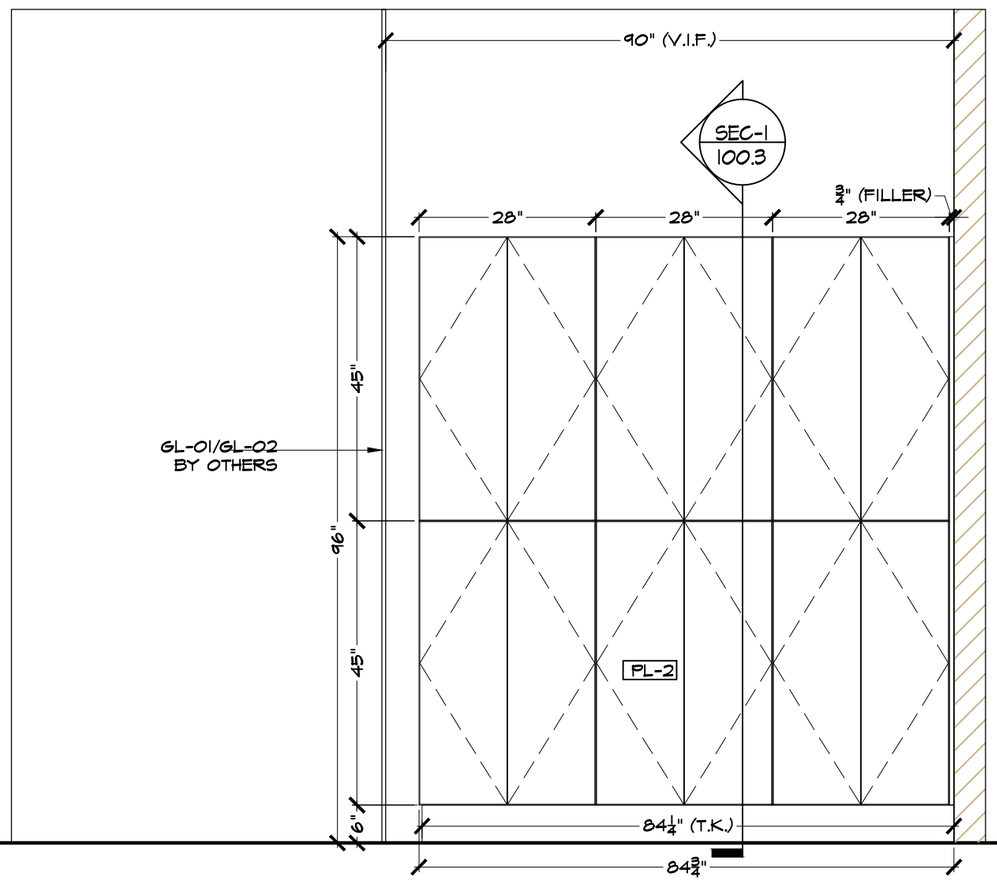

R RETAIL STORAGE CABINET
SCALE: 1/2" = 1'-0" ARCH. REF: 3/A701

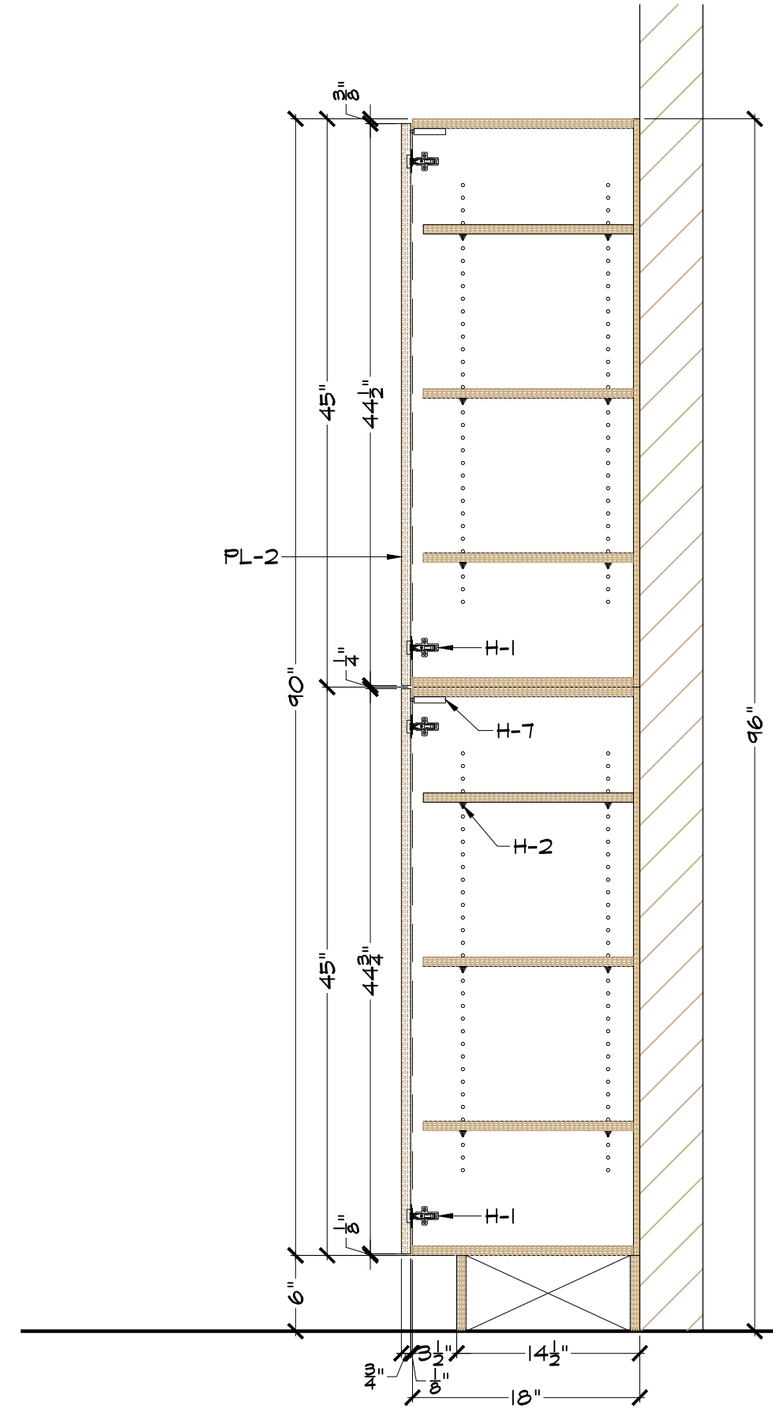

10 SECTION CUT
SCALE: 1" = 1'-0" ARCH. REF: N/A

REVISIONS	#

SEROTONIN St. Petersburg

DESCRIPTION
RETAIL STORAGE CABINET

HEIRLOOM DESIGN GROUP
2770 Apopka Blvd, Apopka, FL 32703
Ph: (407) 735-2242
Web: www.heirloomdesigngroup.com

VETERAN OWNED BUSINESS

CHECKED

DATE
01/09/24

SCALE
AS INDICATED

SHEET
100.3

HARDWARE SCHEDULE

H-1	Blum 105° concealed hinges
H-2	Knapp & Vogt Spoon Pins
H-3	Richelieu / BP8160128160 / Satin Brass / 6 3/8"
H-4	Pro Series 100 full extension slides
H-5	Richelieu /61432171 /Stainless Steel grommet
H-6	Rev-A-Shelf / RV-814PB-11-5 / Pull Out / White
H-7	Blum Push To Open Mechanism
H-8	Richelieu / 9004430 / White Grommet
H-9	Richelieu / 9004490 / Black Grommet
H-10	Mockett / B-2620 / Oval Grommet White
H-11	Rev-A-Shelf / RV-15PB-2-S / Pull Out / White
H-12	File Hanging System FOR Wood Drawers
H-13	Cabinet Locks
H-14	Black Metal 1" Pipe and Flange

LAMINATE SCHEDULE

PL-01	WILSONART / D354-60 / DESIGNER WHITE
PL-02	WILSONART / 8214 / PHANTOM CHARCOAL
PL-03	WILSONART / 6255 / POLISHED GOLD ALUMINUM
PL-04	WILSONART / 5010K-07 / DRAMA MARBLE
PL-05	WILSONART / Y0704-38 / CRIMINI WALNUT

SOLID SURFACE SCHEDULE

SS-01	MEGANITE / MT VANCOUVER / M002
SS-02	MEGANITE / ENCHANTED ROCK
SS-03	CORIAN / ANTARTICA
SS-04	CORIAN / DESIGNER WHITE

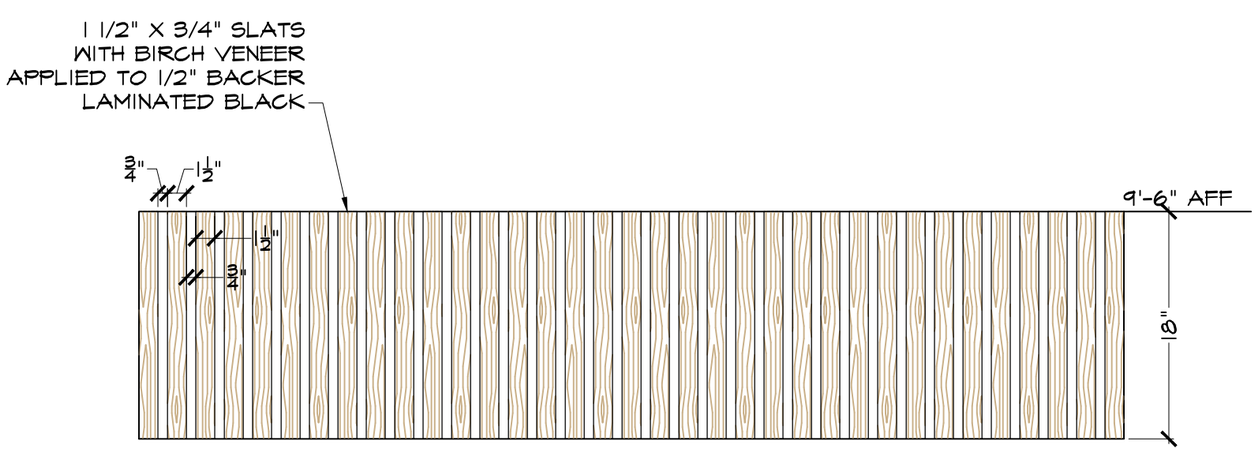

TYP. HALLWY SLAT WALL

SCALE:1" = 1'-0" ARCH. REF: N/A

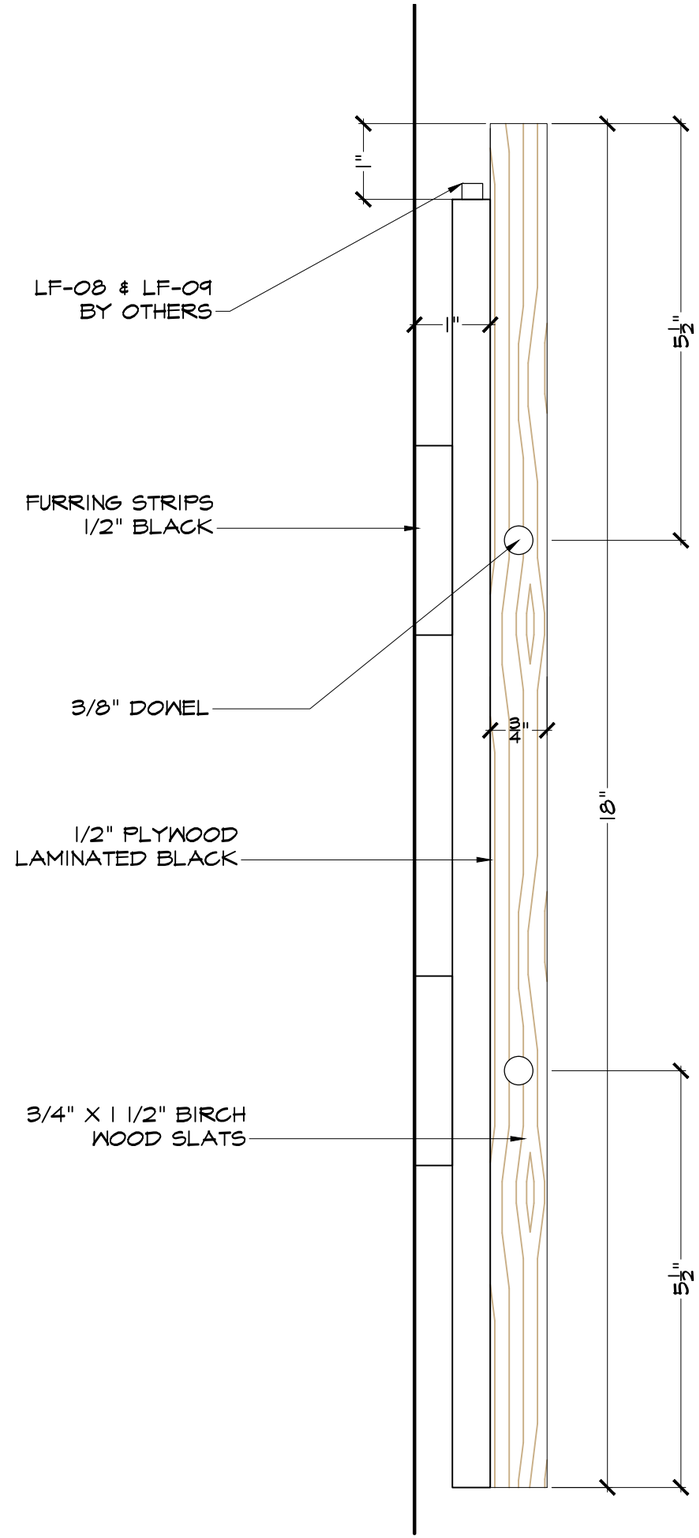

REVISIONS #

SEROTONIN St. Petersburg

DESCRIPTION
HALLWAY SLATWALL DETAILS

HEIRLOOMDESIGNGROUP

VETERAN OWNED BUSINESS

2770 Apopka Blvd, Apopka, FL 32703
Ph: (407) 735-2242
Web: www.heirloomdesigngroup.com

CHECKED

DATE
01/09/24

SCALE
AS INDICATED

SHEET
100.4

LAMINATE SCHEDULE	
PL-01	WILSONART / D354-60 / DESIGNER WHITE
PL-02	WILSONART / 8214 / PHANTOM CHARCOAL
PL-03	WILSONART / 6255 / POLISHED GOLD ALUMINUM
PL-04	WILSONART / 5010K-07 / DRAMA MARBLE
PL-05	WILSONART / Y0704-38 / CRIMINI WALNUT

SOLID SURFACE SCHEDULE	
SS-01	MEGANITE / MT VANCOUVER / M002
SS-02	MEGANITE / ENCHANTED ROCK
SS-03	CORIAN / ANTARTICA
SS-04	CORIAN / DESIGNER WHITE

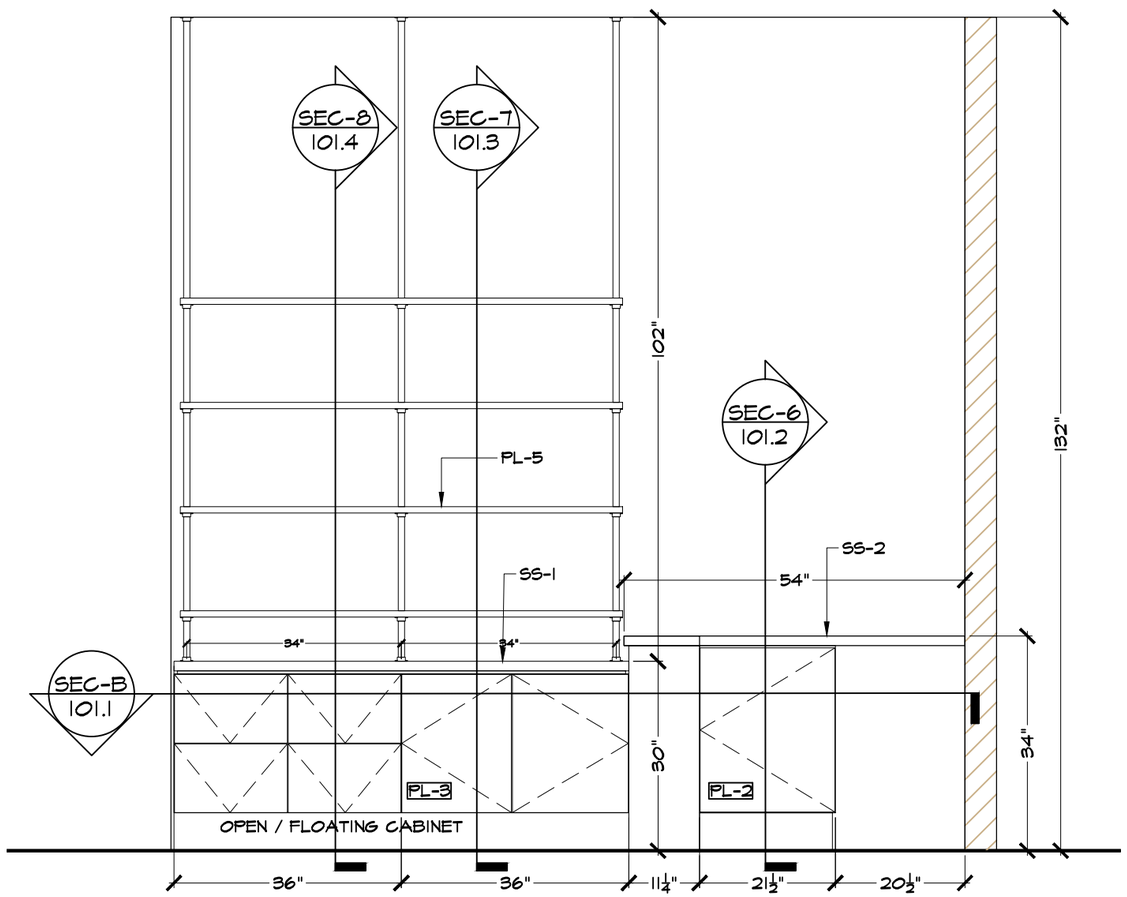

D RETAIL SHELVING AND BEVERAGE STATION
SCALE:1/2" = 1'-0" ARCH. REF: 2/A204-4/A205

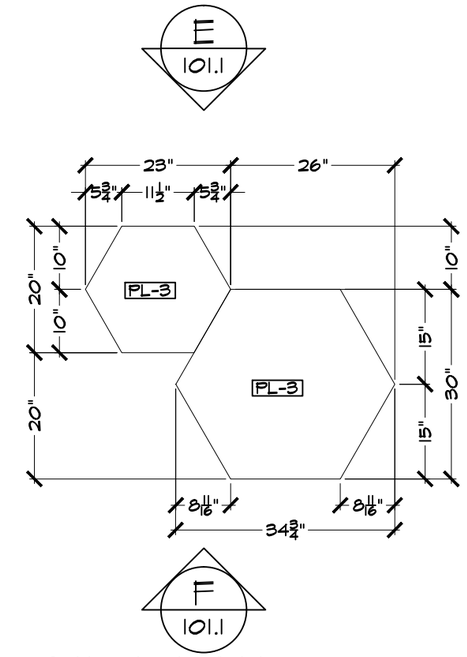

RETAIL ISLAND
SCALE:1/2" = 1'-0" ARCH. REF: 1/A205

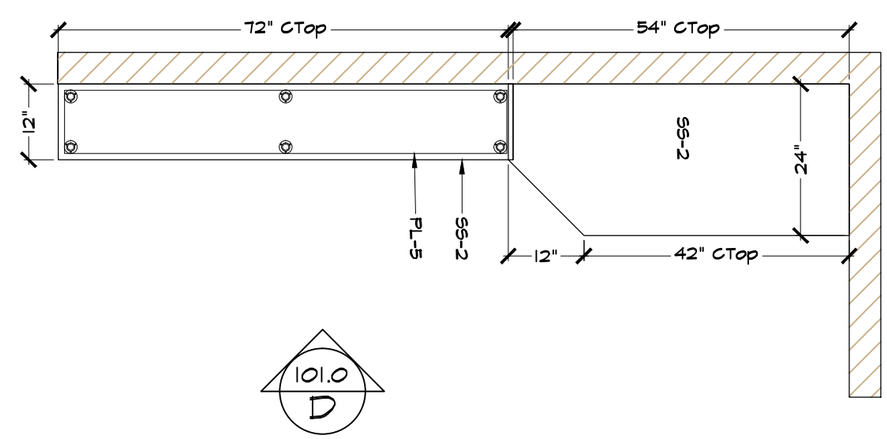

RETAIL AREA PLAN
SCALE:1/2" = 1'-0" ARCH. REF: A204

REVISIONS #

SEROTONIN St. Petersburg

DESCRIPTION
RETAIL DISPLAY AND ISLAND

HEIRLOOMDESIGNGROUP
2770 Apopka Blvd, Apopka, FL 32703
Ph: (407) 735-2242
Web: www.heirloomdesigngroup.com

VETERAN OWNED BUSINESS

CHECKED

DATE
01/09/24

SCALE
AS INDICATED

SHEET
101.0

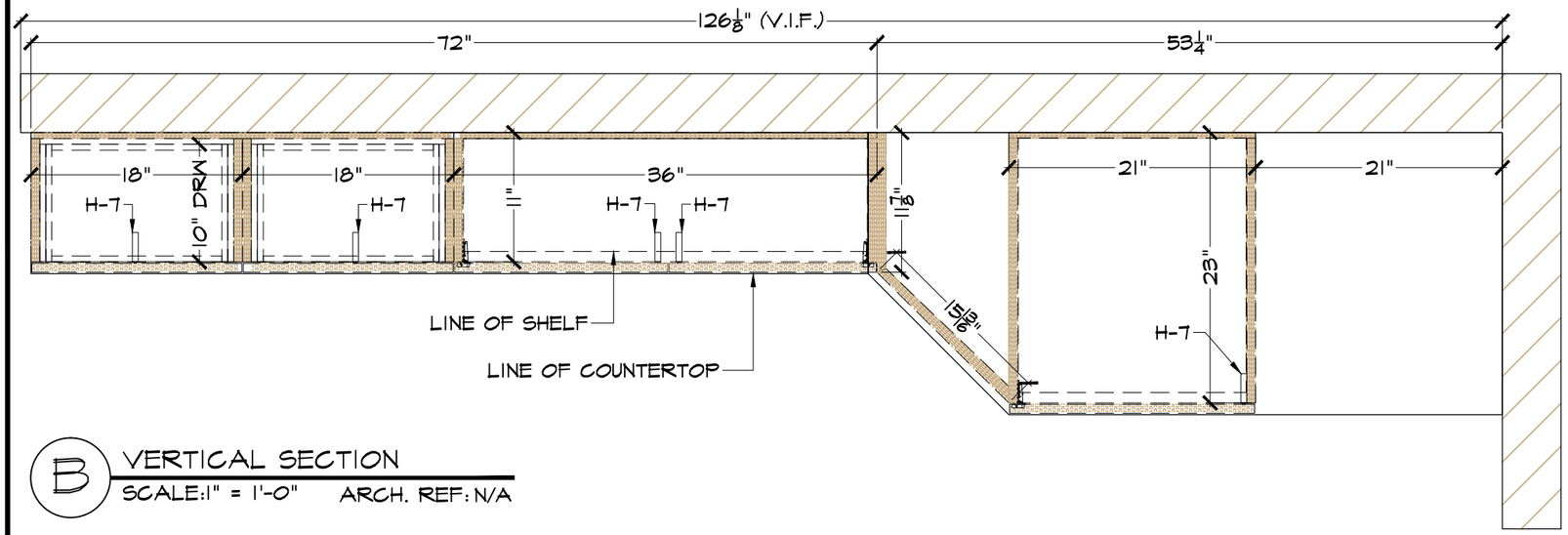

B VERTICAL SECTION
SCALE:1" = 1'-0" ARCH. REF: N/A

HARDWARE SCHEDULE

H-1	Blum 105° concealed hinges
H-2	Knapp & Vogt Spoon Pins
H-3	Richelieu / BP8160128160 / Satin Brass / 6 3/8"
H-4	Pro Series 100 full extension slides
H-5	Richelieu /61432171 /Stainless Steel grommet
H-6	Rev-A-Shelf / RV-814PB-11-5 / Pull Out / White
H-7	Blum Push To Open Mechanism
H-8	Richelieu / 9004430 / White Grommet
H-9	Richelieu / 9004490 / Black Grommet
H-10	Mockett / B-2620 / Oval Grommet White
H-11	Rev-A-Shelf / RV-15PB-2-S / Pull Out / White
H-12	File Hanging System FOR Wood Drawers
H-13	Cabinet Locks
H-14	Black Metal 1" Pipe and Flange

SOLID SURFACE SCHEDULE

SS-01	MEGANITE / MT VANCOUVER / M002
SS-02	MEGANITE / ENCHANTED ROCK
SS-03	CORIAN / ANTARTICA
SS-04	CORIAN / DESIGNER WHITE

LAMINATE SCHEDULE

PL-01	WILSONART / D354-60 / DESIGNER WHITE
PL-02	WILSONART / 8214 / PHANTOM CHARCOAL
PL-03	WILSONART / 6255 / POLISHED GOLD ALUMINUM
PL-04	WILSONART / 5010K-07 / DRAMA MARBLE
PL-05	WILSONART / Y0704-38 / CRIMINI WALNUT

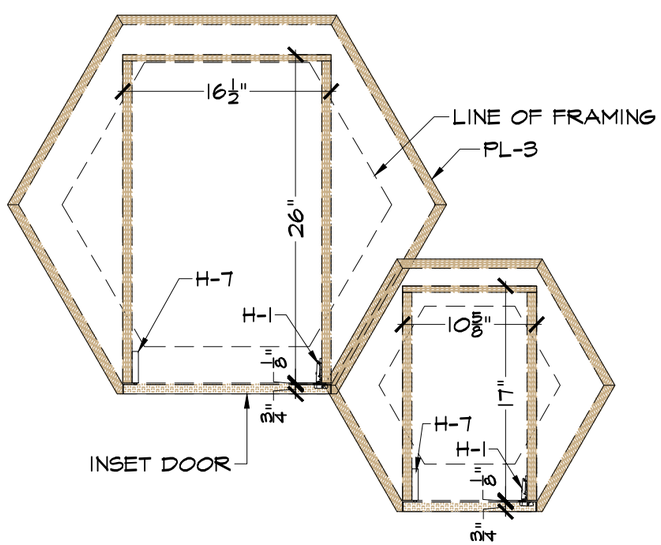

A VERTICAL SECTION
SCALE:1" = 1'-0" ARCH. REF: N/A

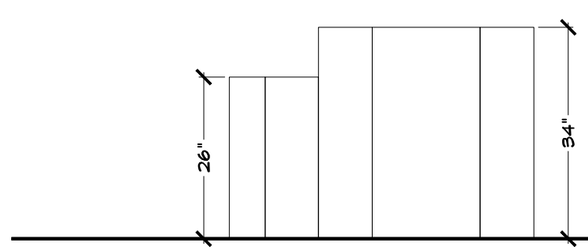

F RETAIL ISLAND
SCALE:1/2" = 1'-0" ARCH. REF: 4/A206

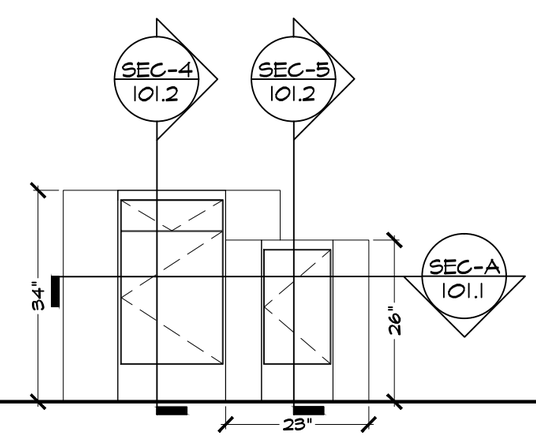

E RETAIL ISLAND
SCALE:1/2" = 1'-0" ARCH. REF: 2/A206

REVISIONS #

SEROTONIN St. Petersburg

DESCRIPTION
RETAIL DISPALY SECTION AND ISLAND

HEIRLOOMDESIGNGROUP
VETERAN OWNED BUSINESS
2770 Apopka Blvd, Apopka, FL 32703
Ph: (407) 735-2242
Web: www.heirloomdesigngroup.com

CHECKED

DATE
01/09/24

SCALE
AS INDICATED

SHEET
101.1

HARDWARE SCHEDULE

H-1	Blum 105° concealed hinges
H-2	Knapp & Vogt Spoon Pins
H-3	Richelieu / BP8160128160 / Satin Brass / 6 3/8"
H-4	Pro Series 100 full extension slides
H-5	Richelieu /61432171 /Stainless Steel grommet
H-6	Rev-A-Shelf / RV-814PB-11-5 / Pull Out / White
H-7	Blum Push To Open Mechanism
H-8	Richelieu / 9004430 / White Grommet
H-9	Richelieu / 9004490 / Black Grommet
H-10	Mockett / B-2620 / Oval Grommet White
H-11	Rev-A-Shelf / RV-15PB-2-S / Pull Out / White
H-12	File Hanging System FOR Wood Drawers
H-13	Cabinet Locks
H-14	Black Metal 1" Pipe and Flange

LAMINATE SCHEDULE

PL-01	WILSONART / D354-60 / DESIGNER WHITE
PL-02	WILSONART / 8214 / PHANTOM CHARCOAL
PL-03	WILSONART / 6255 / POLISHED GOLD ALUMINUM
PL-04	WILSONART / 5010K-07 / DRAMA MARBLE
PL-05	WILSONART / Y0704-38 / CRIMINI WALNUT

SOLID SURFACE SCHEDULE

SS-01	MEGANITE / MT VANCOUVER / M002
SS-02	MEGANITE / ENCHANTED ROCK
SS-03	CORIAN / ANTARTICA
SS-04	CORIAN / DESIGNER WHITE

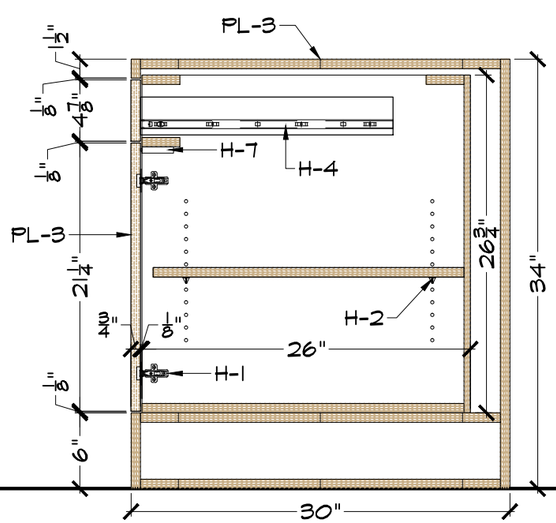

4 SECTION CUT
SCALE:1" = 1'-0" ARCH. REF: N/A

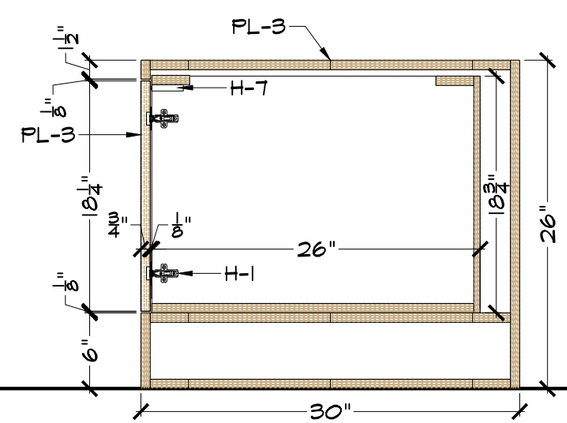

5 SECTION CUT
SCALE:1" = 1'-0" ARCH. REF: N/A

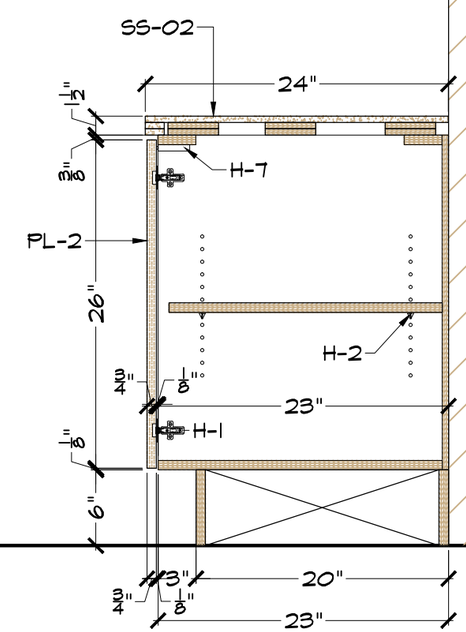

6 SECTION CUT
SCALE:1" = 1'-0" ARCH. REF: N/A

REVISIONS #

SEROTONIN St. Petersburg

DESCRIPTION
SECTIONS AND DETAILS

HEIRLOOMDESIGNGROUP

VETERAN OWNED BUSINESS

2770 Apopka Blvd, Apopka, FL 32703
Ph: (407) 735-2242
Web: www.heirloomdesigngroup.com

CHECKED

DATE
01/09/24

SCALE
AS INDICATED

SHEET
101.2

HARDWARE SCHEDULE	
H-1	Blum 105° concealed hinges
H-2	Knapp & Vogt Spoon Pins
H-3	Richelieu / BP8160128160 / Satin Brass / 6 3/8"
H-4	Pro Series 100 full extension slides
H-5	Richelieu /61432171 /Stainless Steel grommet
H-6	Rev-A-Shelf / RV-814PB-11-5 / Pull Out / White
H-7	Blum Push To Open Mechanism
H-8	Richelieu / 9004430 / White Grommet
H-9	Richelieu / 9004490 / Black Grommet
H-10	Mockett / B-2620 / Oval Grommet White
H-11	Rev-A-Shelf / RV-15PB-2-S / Pull Out / White
H-12	File Hanging System FOR Wood Drawers
H-13	Cabinet Locks
H-14	Black Metal 1" Pipe and Flange

LAMINATE SCHEDULE	
PL-01	WILSONART / D354-60 / DESIGNER WHITE
PL-02	WILSONART / 8214 / PHANTOM CHARCOAL
PL-03	WILSONART / 6255 / POLISHED GOLD ALUMINUM
PL-04	WILSONART / 5010K-07 / DRAMA MARBLE
PL-05	WILSONART / Y0704-38 / CRIMINI WALNUT

SOLID SURFACE SCHEDULE	
SS-01	MEGANITE / MT VANCOUVER / M002
SS-02	MEGANITE / ENCHANTED ROCK
SS-03	CORIAN / ANTARTICA
SS-04	CORIAN / DESIGNER WHITE

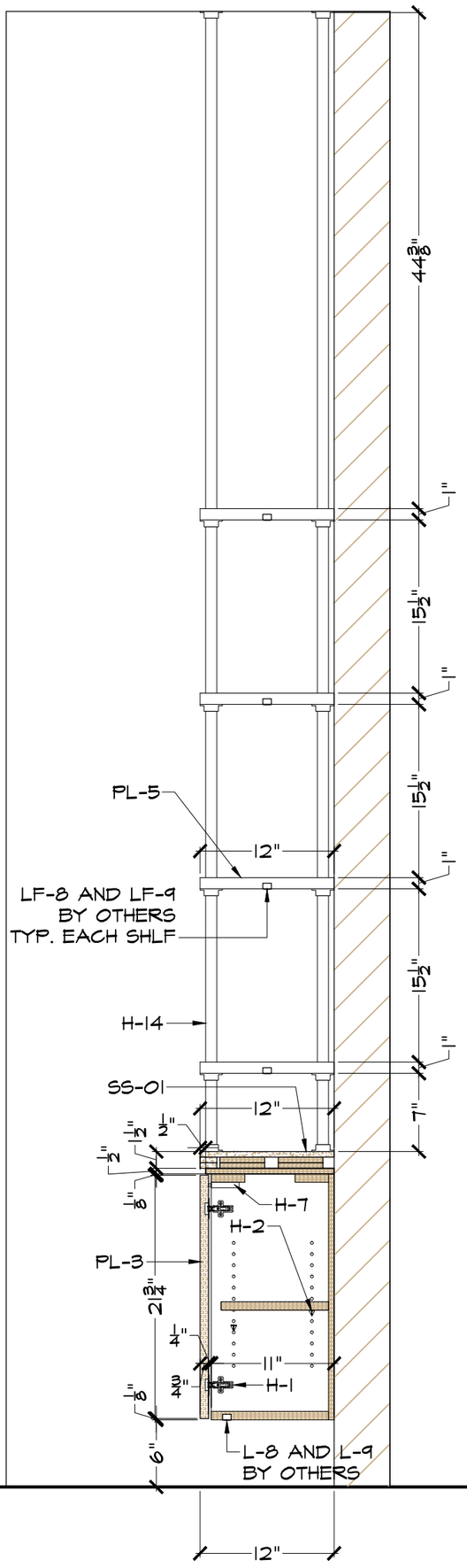

7 SECTION CUT

SCALE: 1" = 1'-0" ARCH. REF: N/A

SHEET 101.3

DATE 01/09/24

SCALE AS INDICATED

CHECKED

HEIRLOOM DESIGN GROUP

2770 Apopka Blvd, Apopka, FL 32703

Ph: (407) 735-2242

Web: www.heirloomdesigngroup.com

VETERAN OWNED BUSINESS

SEROTONIN St. Petersburg

DESCRIPTION

SECTIONS AND DETAILS

REVISIONS #

HARDWARE SCHEDULE	
H-1	Blum 105° concealed hinges
H-2	Knapp & Vogt Spoon Pins
H-3	Richelieu / BP8160128160 / Satin Brass / 6 3/8"
H-4	Pro Series 100 full extension slides
H-5	Richelieu /61432171 /Stainless Steel grommet
H-6	Rev-A-Shelf / RV-814PB-11-5 / Pull Out / White
H-7	Blum Push To Open Mechanism
H-8	Richelieu / 9004430 / White Grommet
H-9	Richelieu / 9004490 / Black Grommet
H-10	Mockett / B-2620 / Oval Grommet White
H-11	Rev-A-Shelf / RV-15PB-2-S / Pull Out / White
H-12	File Hanging System FOR Wood Drawers
H-13	Cabinet Locks
H-14	Black Metal 1" Pipe and Flange

LAMINATE SCHEDULE	
PL-01	WILSONART / D354-60 / DESIGNER WHITE
PL-02	WILSONART / 8214 / PHANTOM CHARCOAL
PL-03	WILSONART / 6255 / POLISHED GOLD ALUMINUM
PL-04	WILSONART / 5010K-07 / DRAMA MARBLE
PL-05	WILSONART / Y0704-38 / CRIMINI WALNUT

SOLID SURFACE SCHEDULE	
SS-01	MEGANITE / MT VANCOUVER / M002
SS-02	MEGANITE / ENCHANTED ROCK
SS-03	CORIAN / ANTARTICA
SS-04	CORIAN / DESIGNER WHITE

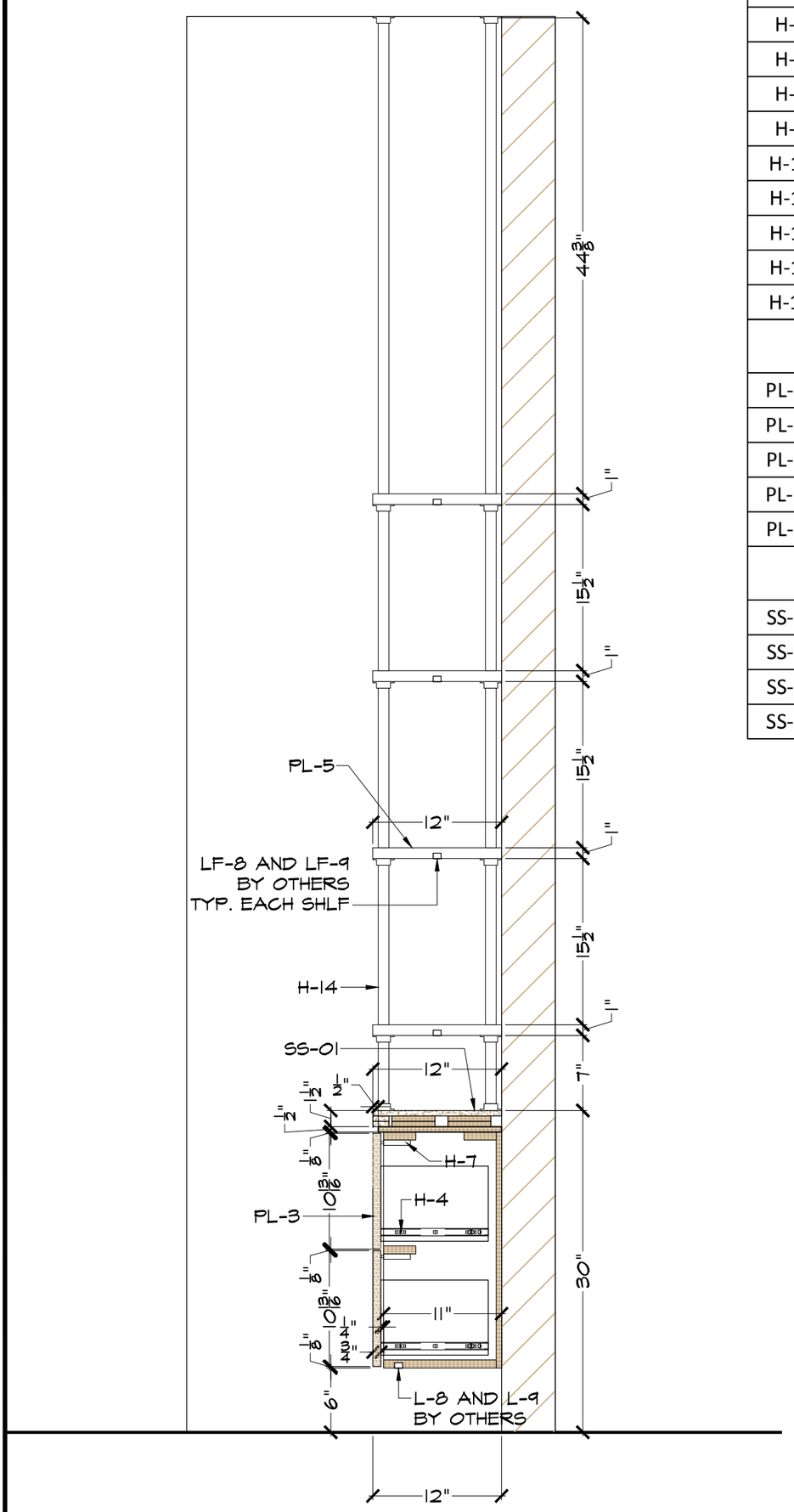

8 SECTION CUT

SCALE:1" = 1'-0" ARCH. REF: N/A

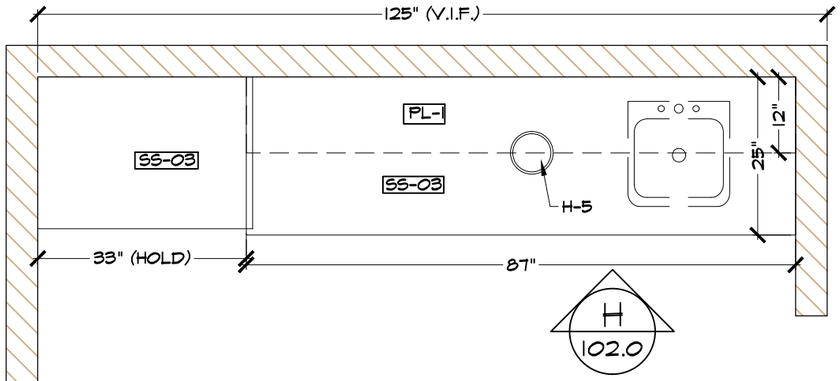

TREATMENT 1, (3) OP HAND

SCALE:1/2" = 1'-0" ARCH. REF: 5/A703

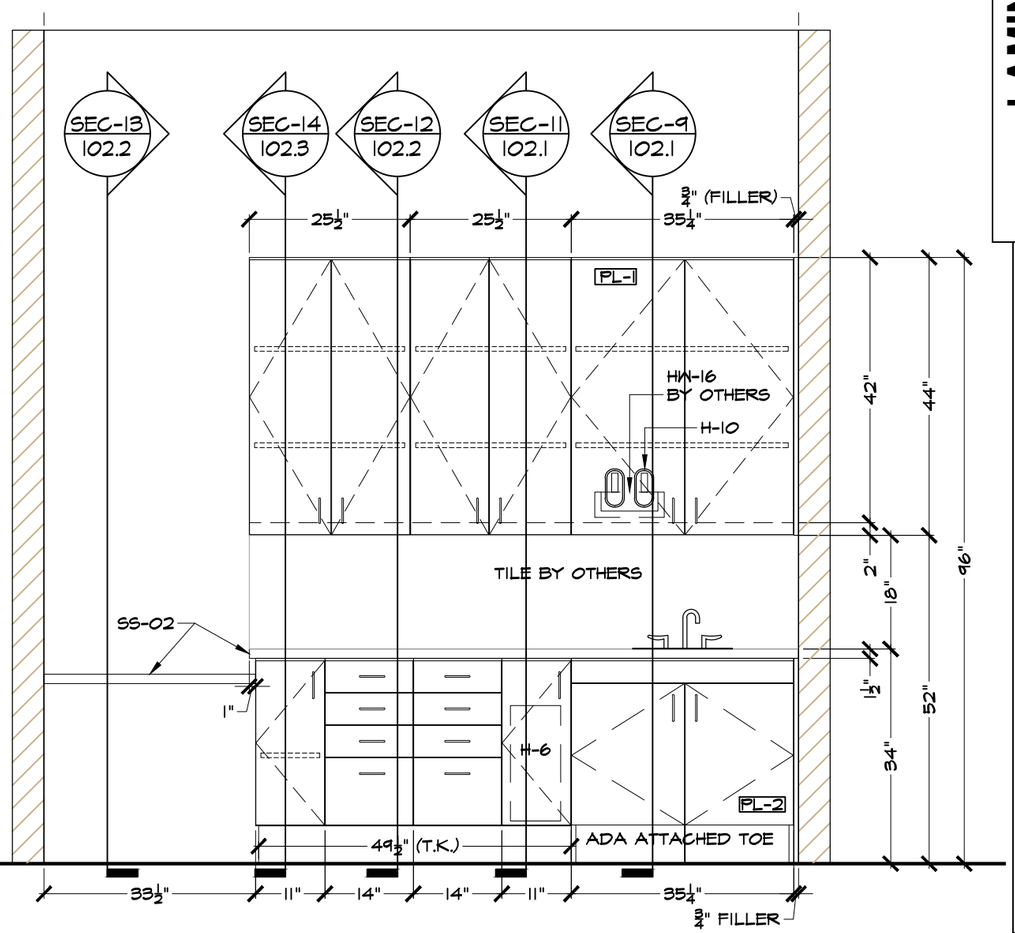

TREATMENT ROOMS 1, (3) OPP HAND

SCALE:1/2" = 1'-0" ARCH. REF: 1/A703

LAMINATE SCHEDULE

PL-01	WILSONART / D354-60 / DESIGNER WHITE
PL-02	WILSONART / 8214 / PHANTOM CHARCOAL
PL-03	WILSONART / 6255 / POLISHED GOLD ALUMINUM
PL-04	WILSONART / 5010K-07 / DRAMA MARBLE
PL-05	WILSONART / Y0704-38 / CRIMINI WALNUT

SOLID SURFACE SCHEDULE

SS-01	MEGANITE / MT VANCOUVER / M002
SS-02	MEGANITE / ENCHANTED ROCK
SS-03	CORIAN / ANTARTICA
SS-04	CORIAN / DESIGNER WHITE

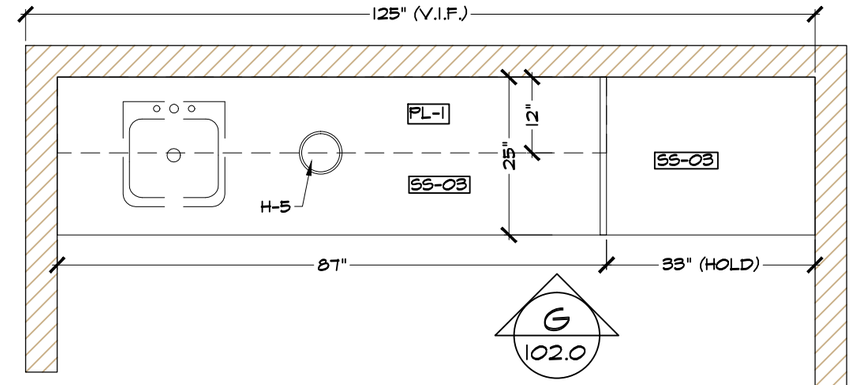

TREATMENT 4, (2 & 5 OPP HAND)

SCALE:1/2" = 1'-0" ARCH. REF: 5/A704

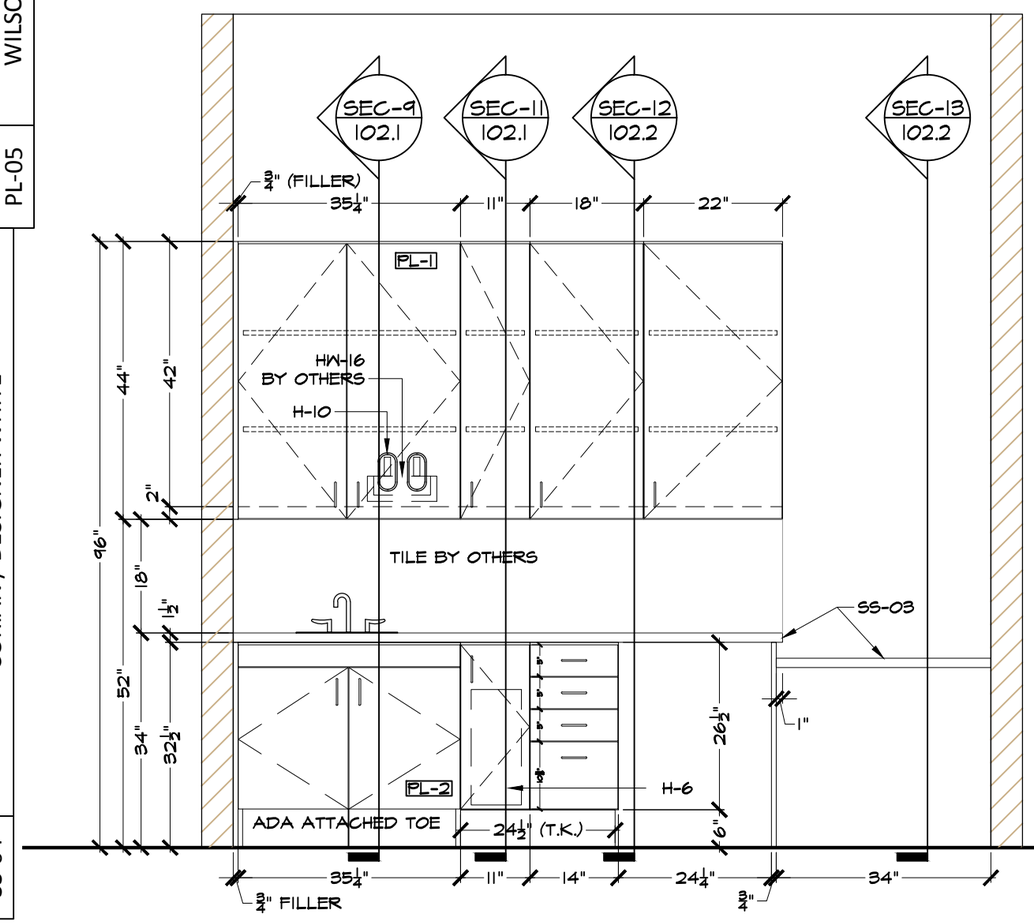

TREATMENT ROOM 4, (2 & 5 OPP HAND)

SCALE:1/2" = 1'-0" ARCH. REF: 1/A704

REVISIONS	#

SEROTONIN St. Petersburg

DESCRIPTION
TREATMENT ROOMS

HEIRLOOM DESIGN GROUP
VETERAN OWNED BUSINESS
2770 Apopka Blvd, Apopka, FL 32703
Ph: (407) 735-2242
Web: www.heirloomdesigngroup.com

CHECKED

DATE
01/09/24

SCALE
AS INDICATED

SHEET
102.0

LAMINATE SCHEDULE

PL-01	WILSONART / D354-60 / DESIGNER WHITE
PL-02	WILSONART / 8214 / PHANTOM CHARCOAL
PL-03	WILSONART / 6255 / POLISHED GOLD ALUMINUM
PL-04	WILSONART / 5010K-07 / DRAMA MARBLE
PL-05	WILSONART / Y0704-38 / CRIMINI WALNUT

SOLID SURFACE SCHEDULE

SS-01	MEGANITE / MT VANCOUVER / M002
SS-02	MEGANITE / ENCHANTED ROCK
SS-03	CORIAN / ANTARTICA
SS-04	CORIAN / DESIGNER WHITE

HARDWARE SCHEDULE

H-1	Blum 105° concealed hinges
H-2	Knapp & Vogt Spoon Pins
H-3	Richelieu / BP8160128160 / Satin Brass / 6 3/8"
H-4	Pro Series 100 full extension slides
H-5	Richelieu /61432171 /Stainless Steel grommet
H-6	Rev-A-Shelf / RV-814PB-11-5 / Pull Out / White
H-7	Blum Push To Open Mechanism
H-8	Richelieu / 9004430 / White Grommet
H-9	Richelieu / 9004490 / Black Grommet
H-10	Mockett / B-2620 / Oval Grommet White
H-11	Rev-A-Shelf / RV-15PB-2-S / Pull Out / White
H-12	File Hanging System FOR Wood Drawers
H-13	Cabinet Locks
H-14	Black Metal 1" Pipe and Flange

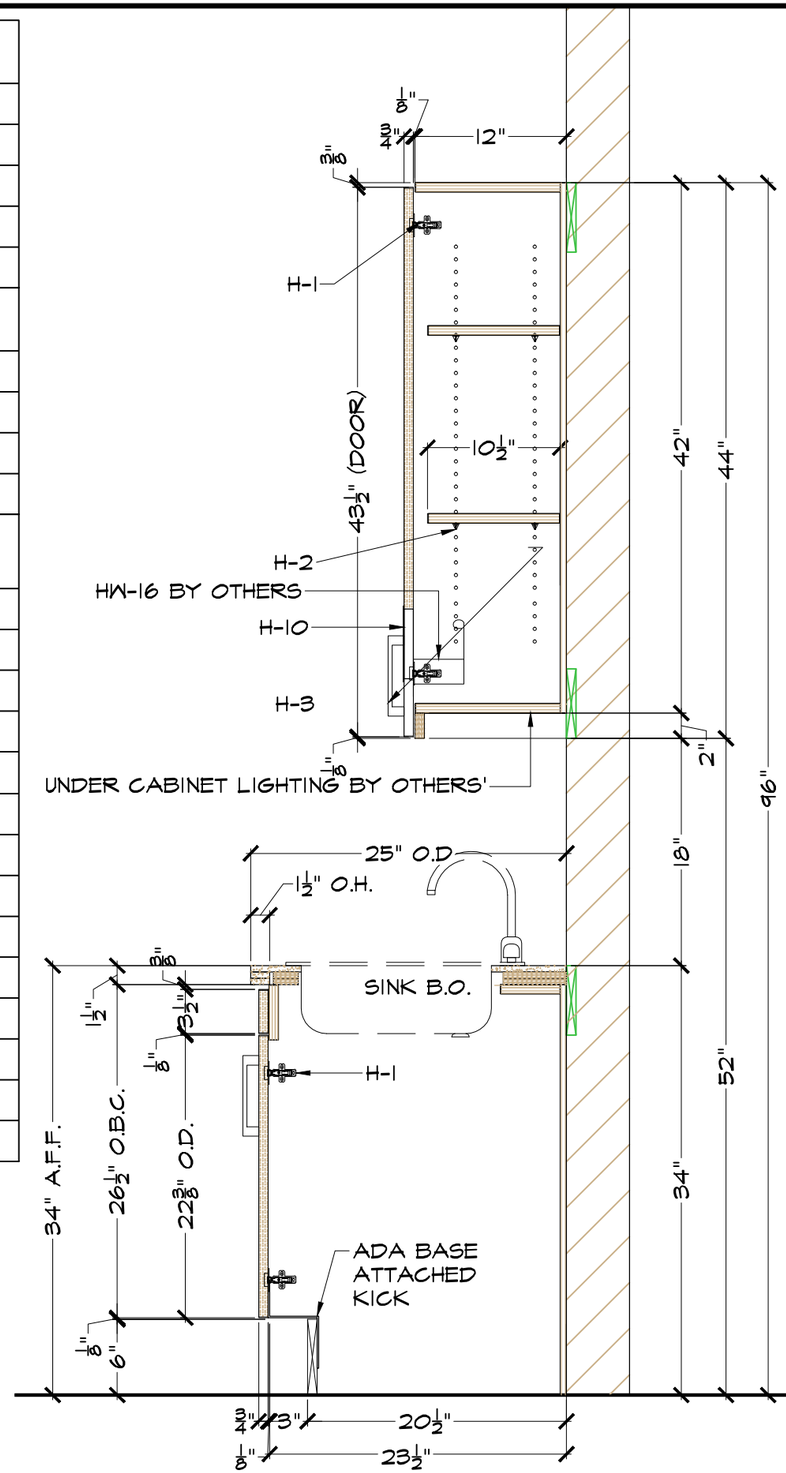

9 SECTION
SCALE:1" = 1'-0" ARCH. REF: N/A

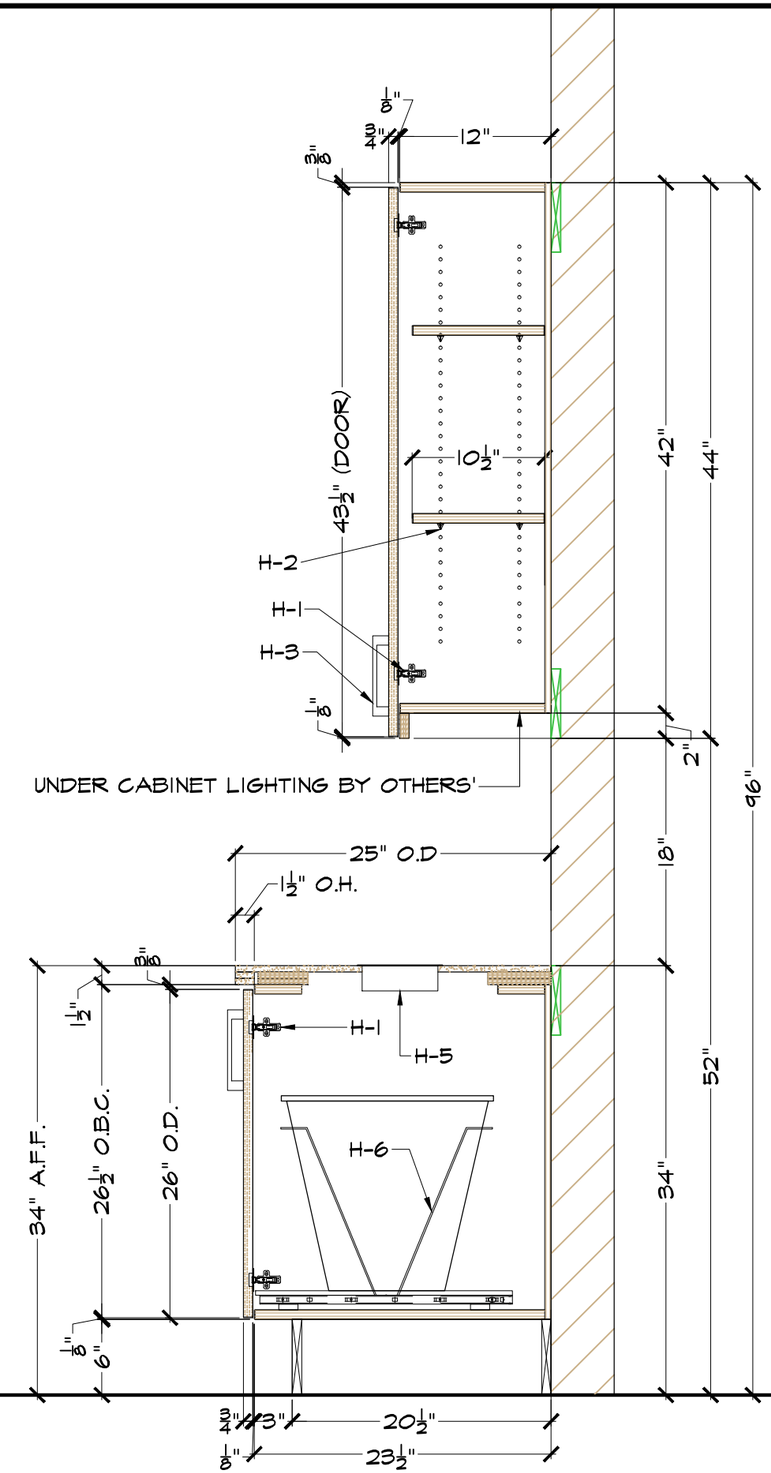

11 SECTION
SCALE:1" = 1'-0" ARCH. REF: N/A

REVISIONS #

SEROTONIN St. Petersburg

DESCRIPTION
SECTIONS AND DETAILS

HEIRLOOMDESIGNGROUP

VETERAN OWNED BUSINESS

2770 Apopka Blvd, Apopka, FL 32703
Ph: (407) 735-2242
Web: www.heirloomdesigngroup.com

CHECKED

DATE 01/09/24

SCALE AS INDICATED

SHEET 102.1

LAMINATE SCHEDULE

PL-01	WILSONART / D354-60 / DESIGNER WHITE
PL-02	WILSONART / 8214 / PHANTOM CHARCOAL
PL-03	WILSONART / 6255 / POLISHED GOLD ALUMINUM
PL-04	WILSONART / 5010K-07 / DRAMA MARBLE
PL-05	WILSONART / Y0704-38 / CRIMINI WALNUT

SOLID SURFACE SCHEDULE

SS-01	MEGANITE / MT VANCOUVER / M002
SS-02	MEGANITE / ENCHANTED ROCK
SS-03	CORIAN / ANTARTICA
SS-04	CORIAN / DESIGNER WHITE

HARDWARE SCHEDULE

H-1	Blum 105° concealed hinges
H-2	Knapp & Vogt Spoon Pins
H-3	Richelieu / BP8160128160 / Satin Brass / 6 3/8"
H-4	Pro Series 100 full extension slides
H-5	Richelieu /61432171 /Stainless Steel grommet
H-6	Rev-A-Shelf / RV-814PB-11-5 / Pull Out / White
H-7	Blum Push To Open Mechanism
H-8	Richelieu / 9004430 / White Grommet
H-9	Richelieu / 9004490 / Black Grommet
H-10	Mockett / B-2620 / Oval Grommet White
H-11	Rev-A-Shelf / RV-15PB-2-S / Pull Out / White
H-12	File Hanging System FOR Wood Drawers
H-13	Cabinet Locks
H-14	Black Metal 1" Pipe and Flange

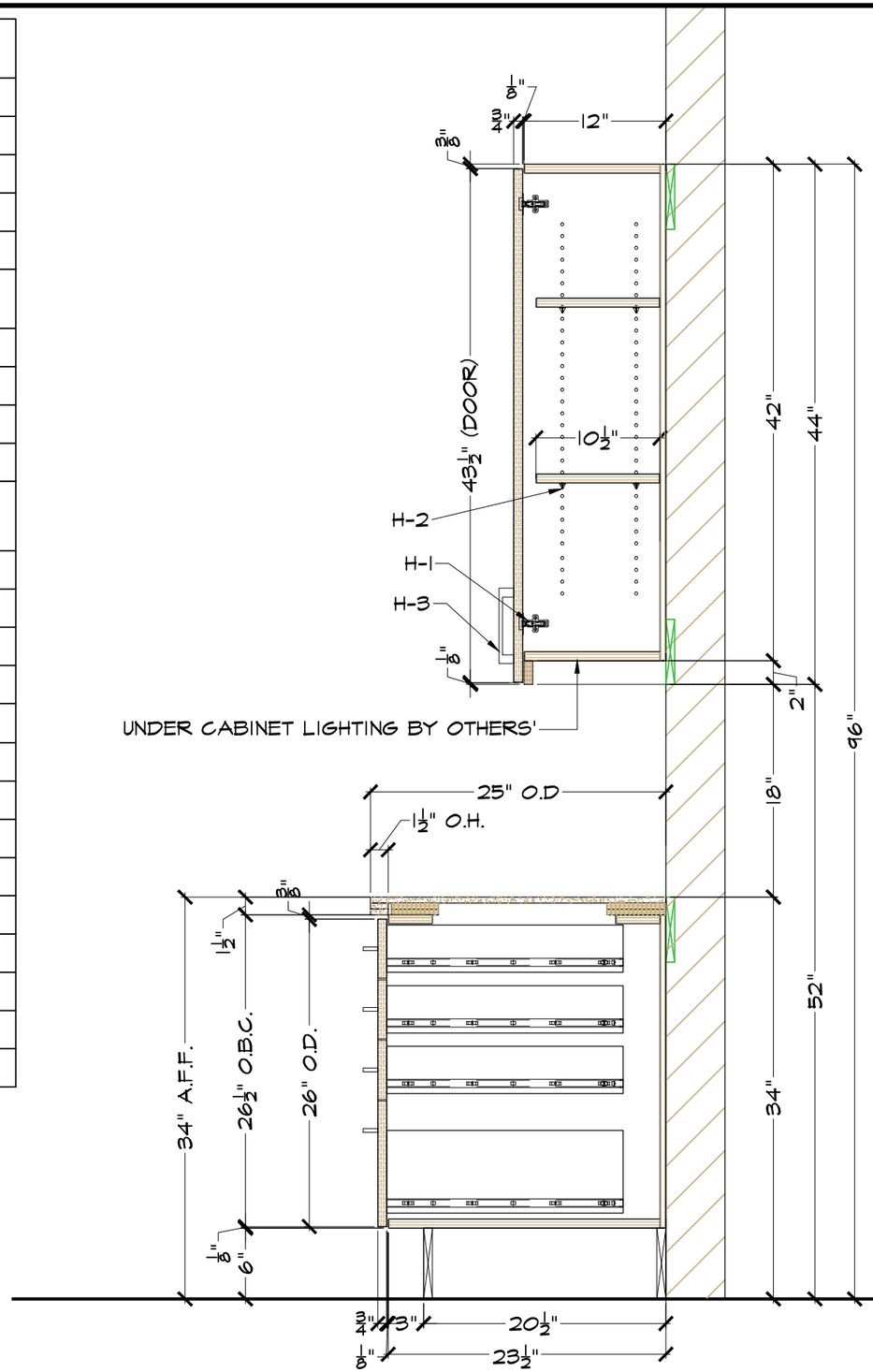

12 SECTION
SCALE:1" = 1'-0" ARCH. REF: N/A

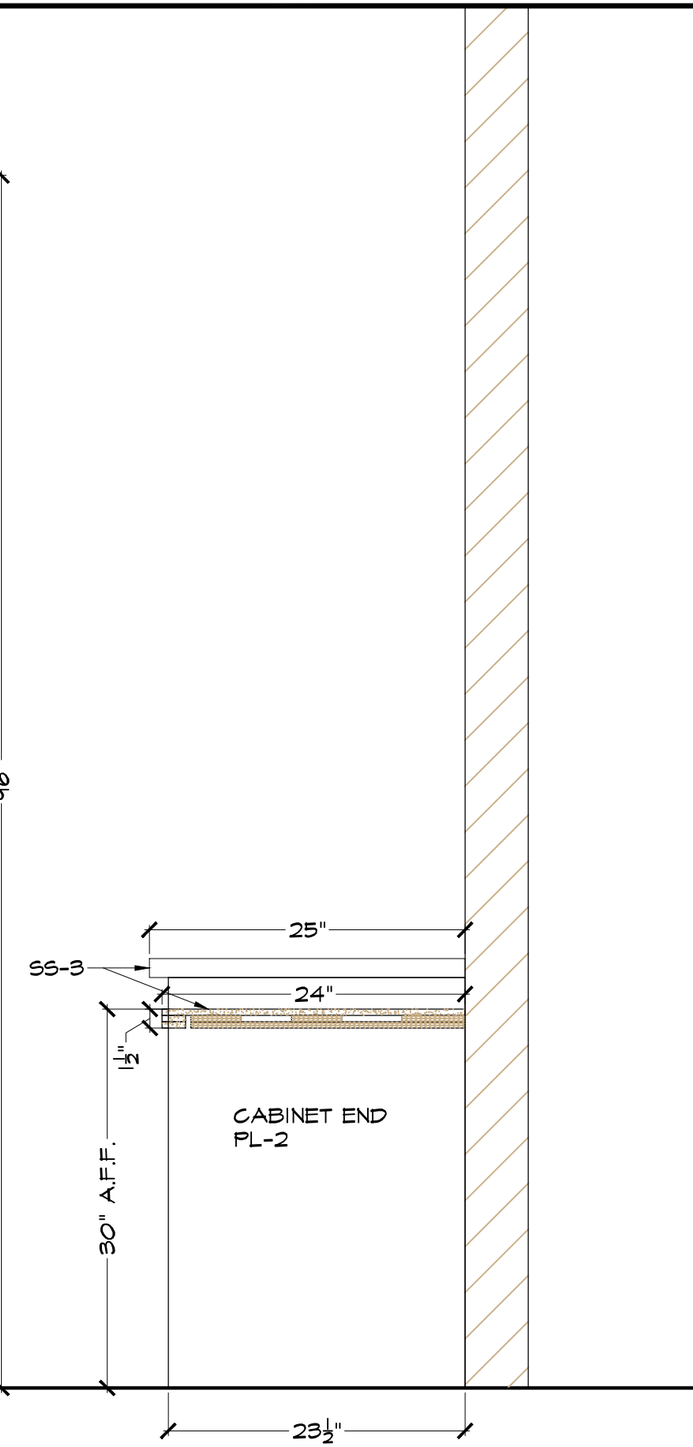

13 SECTION
SCALE:1" = 1'-0" ARCH. REF: N/A

REVISIONS #

SEROTONIN St. Petersburg

DESCRIPTION
SECTIONS AND DETAILS

HEIRLOOMDESIGNGROUP
VETERAN OWNED BUSINESS
2770 Apopka Blvd, Apopka, FL 32703
Ph: (407) 735-2242
Web: www.heirloomdesigngroup.com

CHECKED
DATE 01/09/24
SCALE AS INDICATED
SHEET 102.2

LAMINATE SCHEDULE

PL-01	WILSONART / D354-60 / DESIGNER WHITE
PL-02	WILSONART / 8214 / PHANTOM CHARCOAL
PL-03	WILSONART / 6255 / POLISHED GOLD ALUMINUM
PL-04	WILSONART / 5010K-07 / DRAMA MARBLE
PL-05	WILSONART / Y0704-38 / CRIMINI WALNUT

SOLID SURFACE SCHEDULE

SS-01	MEGANITE / MT VANCOUVER / M002
SS-02	MEGANITE / ENCHANTED ROCK
SS-03	CORIAN / ANTARTICA
SS-04	CORIAN / DESIGNER WHITE

HARDWARE SCHEDULE

H-1	Blum 105° concealed hinges
H-2	Knapp & Vogt Spoon Pins
H-3	Richelieu / BP8160128160 / Satin Brass / 6 3/8"
H-4	Pro Series 100 full extension slides
H-5	Richelieu /61432171 /Stainless Steel grommet
H-6	Rev-A-Shelf / RV-814PB-11-5 / Pull Out / White
H-7	Blum Push To Open Mechanism
H-8	Richelieu / 9004430 / White Grommet
H-9	Richelieu / 9004490 / Black Grommet
H-10	Mockett / B-2620 / Oval Grommet White
H-11	Rev-A-Shelf / RV-15PB-2-S / Pull Out / White
H-12	File Hanging System FOR Wood Drawers
H-13	Cabinet Locks
H-14	Black Metal 1" Pipe and Flange

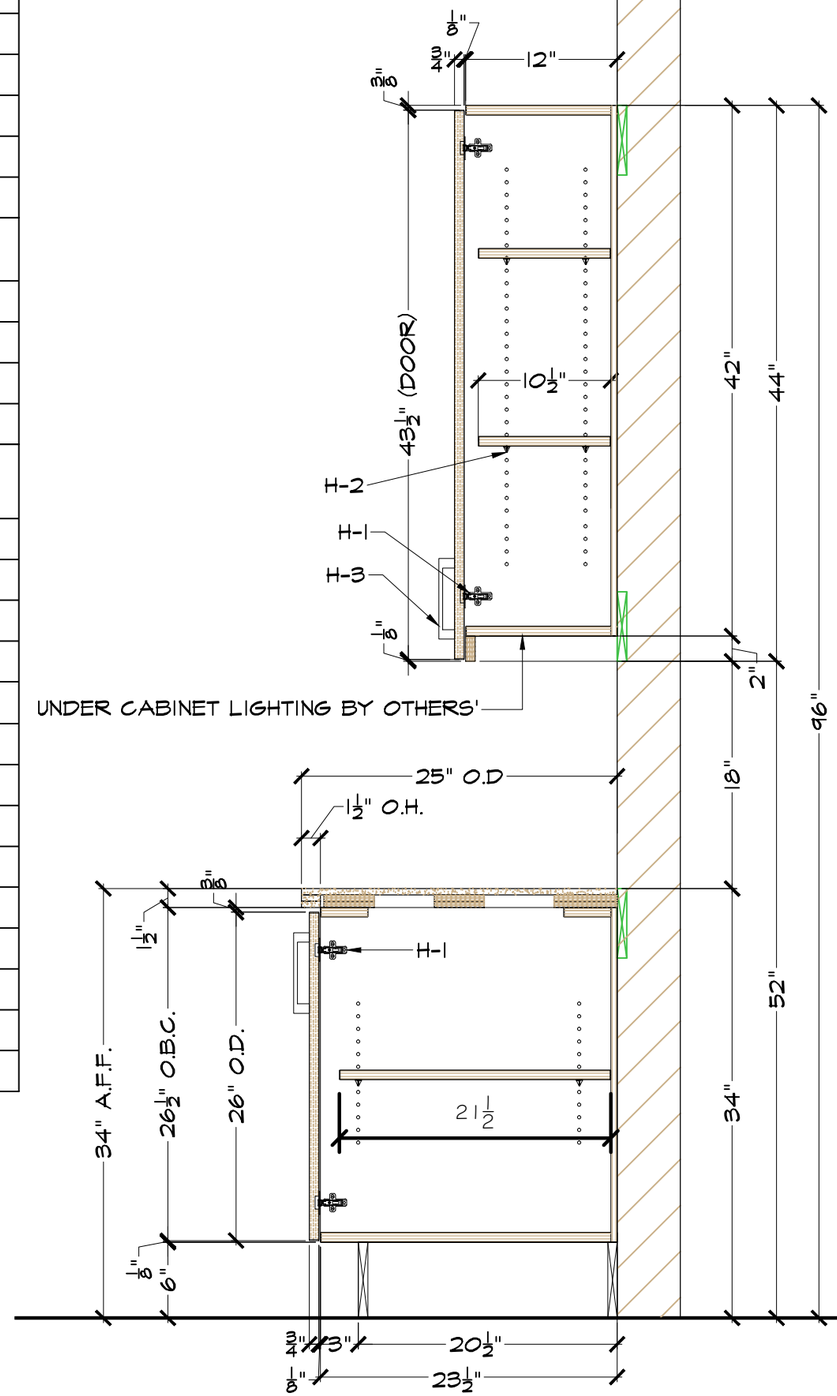

14 SECTION
SCALE: 1" = 1'-0" ARCH. REF: N/A

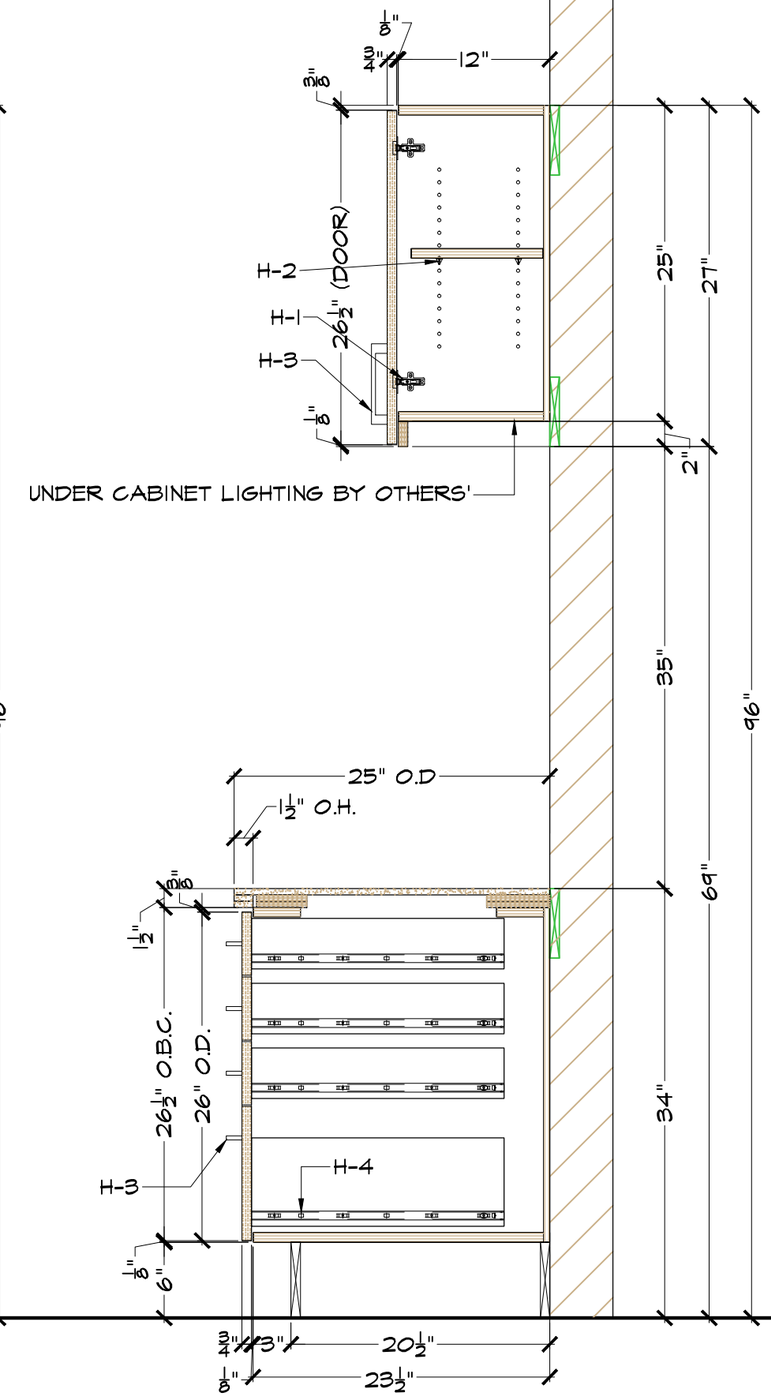

15 SECTION
SCALE: 1" = 1'-0" ARCH. REF: N/A

REVISIONS	#

SEROTONIN St. Petersburg

DESCRIPTION
SECTIONS AND DETAILS

HEIRLOOMDESIGNGROUP
VETERAN OWNED BUSINESS
2770 Apopka Blvd, Apopka, FL 32703
Ph: (407) 735-2242
Web: www.heirloomdesigngroup.com

CHECKED

DATE 01/09/24

SCALE AS INDICATED

SHEET 102.3

LAMINATE SCHEDULE	
PL-01	WILSONART / D354-60 / DESIGNER WHITE
PL-02	WILSONART / 8214 / PHANTOM CHARCOAL
PL-03	WILSONART / 6255 / POLISHED GOLD ALUMINUM
PL-04	WILSONART / 5010K-07 / DRAMA MARBLE
PL-05	WILSONART / Y0704-38 / CRIMINI WALNUT

SOLID SURFACE SCHEDULE	
SS-01	MEGANITE / MT VANCOUVER / M002
SS-02	MEGANITE / ENCHANTED ROCK
SS-03	CORIAN / ANTARTICA
SS-04	CORIAN / DESIGNER WHITE

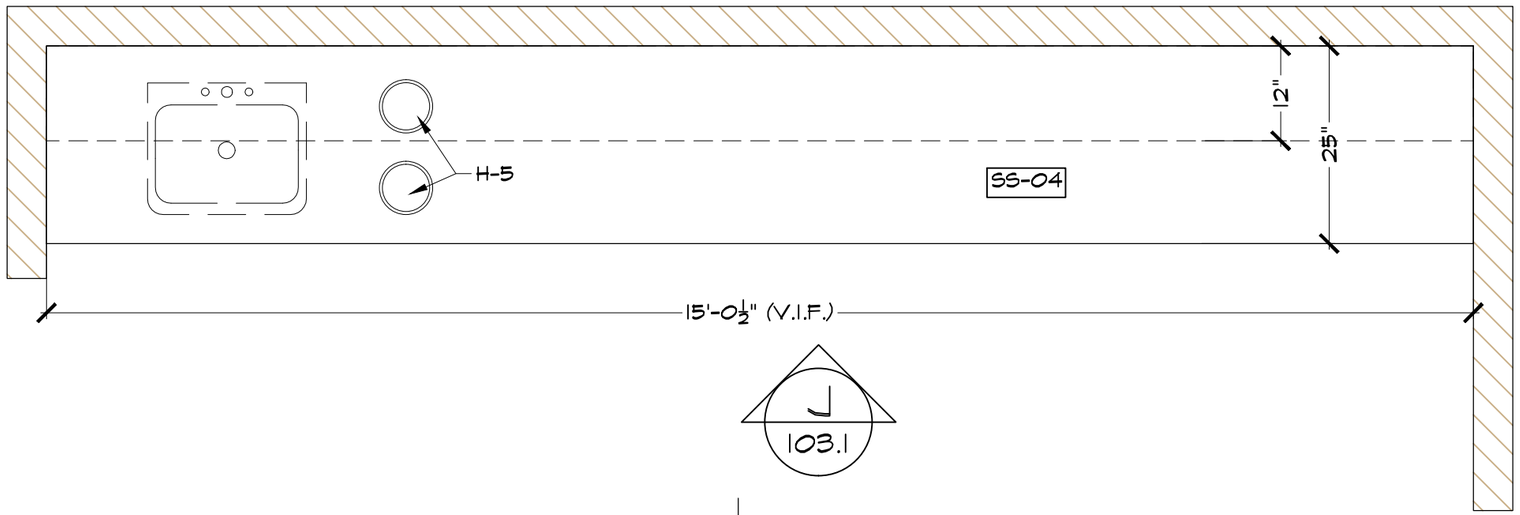

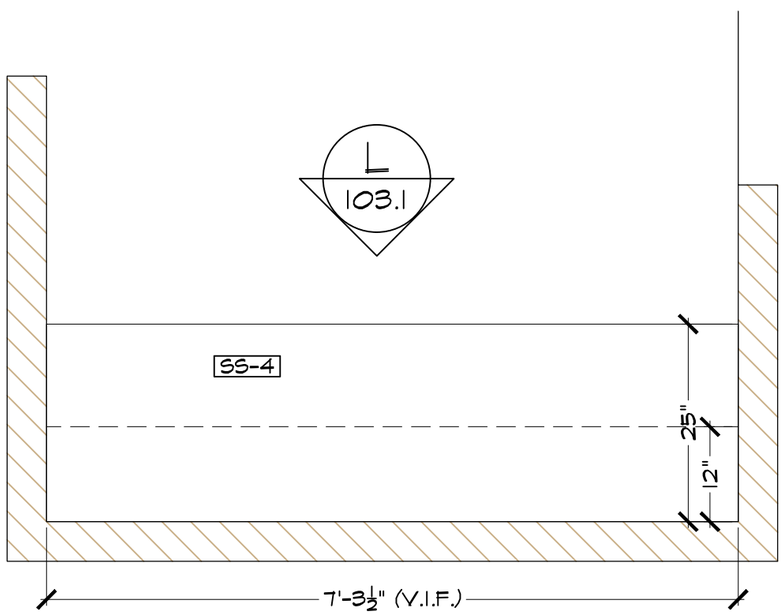

NURSE STATION / DISPENSARY

SCALE:1/2" = 1'-0" ARCH. REF: 1/A707

REVISIONS #

SEROTONIN St. Petersburg

DESCRIPTION
NURSE STATION / DISPENSARY

HEIRLOOMDESIGNGROUP

VETERAN OWNED BUSINESS

2770 Apopka Blvd, Apopka, FL 32703
Ph: (407) 735-2242
Web: www.heirloomdesigngroup.com

CHECKED

DATE 01/09/24

SCALE AS INDICATED

SHEET 103.0

LAMINATE SCHEDULE	
PL-01	WILSONART / D354-60 / DESIGNER WHITE
PL-02	WILSONART / 8214 / PHANTOM CHARCOAL
PL-03	WILSONART / 6255 / POLISHED GOLD ALUMINUM
PL-04	WILSONART / 5010K-07 / DRAMA MARBLE
PL-05	WILSONART / Y0704-38 / CRIMINI WALNUT

SOLID SURFACE SCHEDULE	
SS-01	MEGANITE / MT VANCOUVER / M002
SS-02	MEGANITE / ENCHANTED ROCK
SS-03	CORIAN / ANTARTICA
SS-04	CORIAN / DESIGNER WHITE

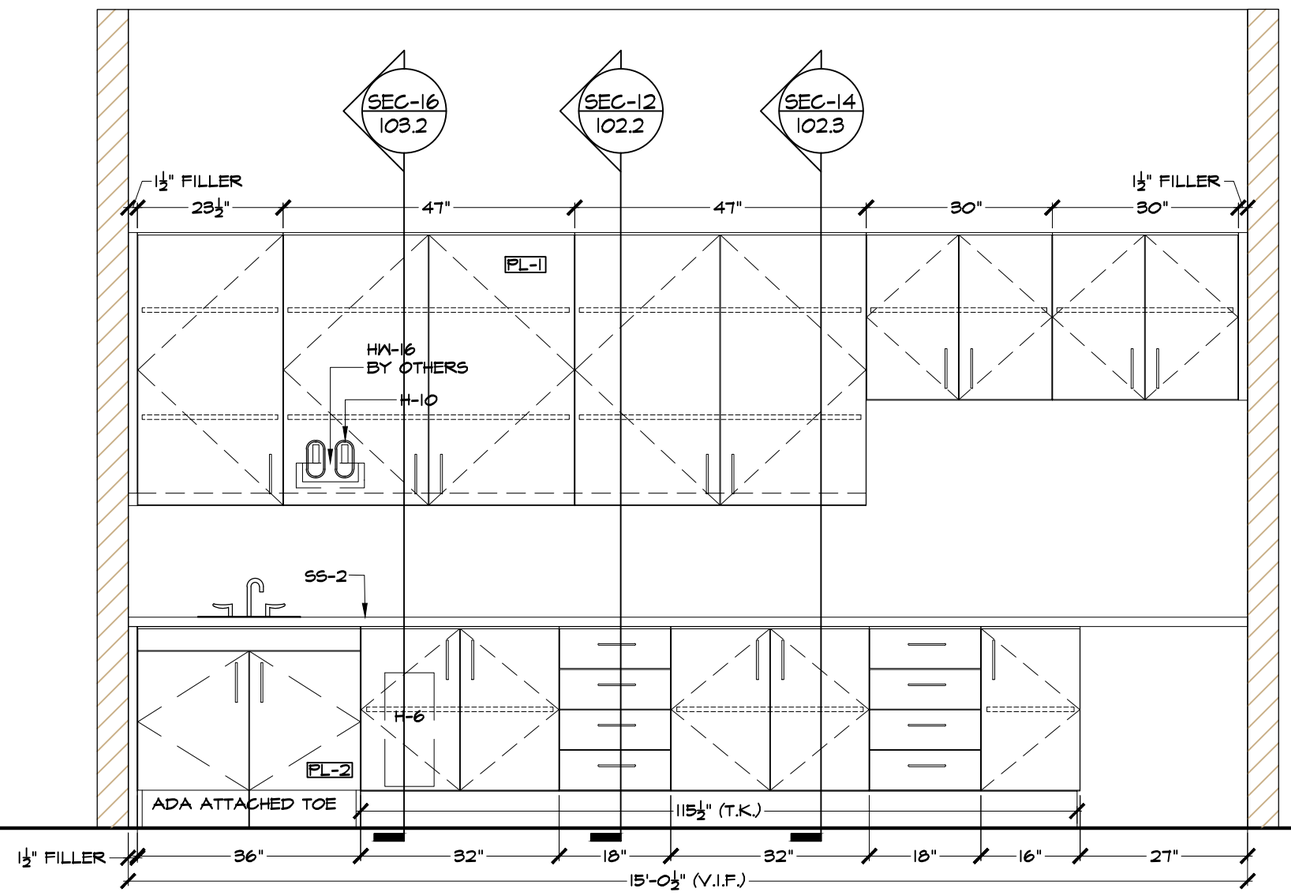

NURSE STATION / DISPENSARY
SCALE:1/2" = 1'-0" ARCH. REF: 4/A707

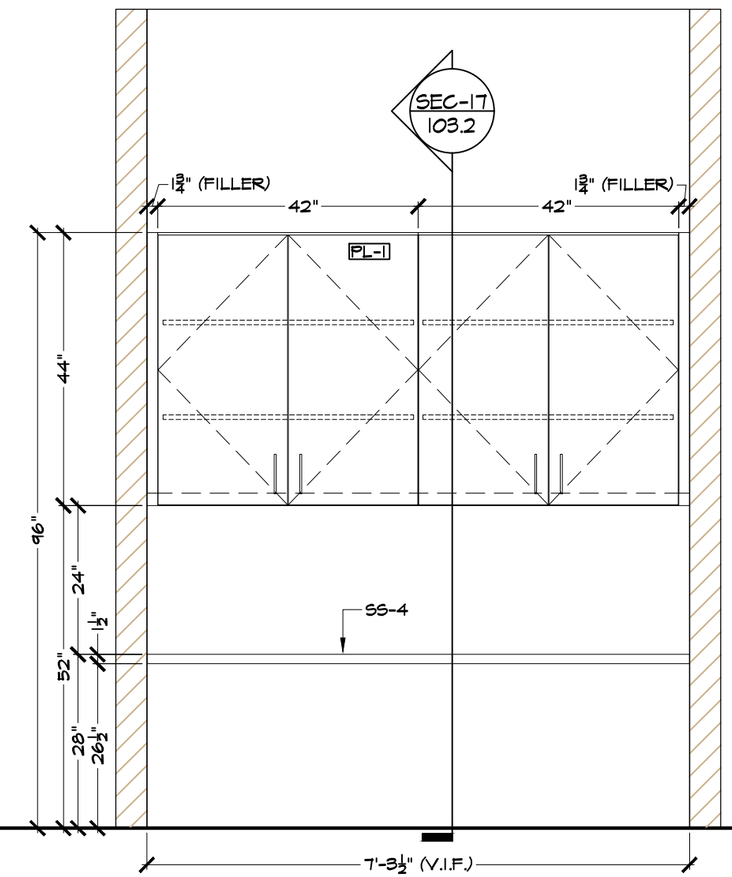

NURSE STATION / DISPENSARY
SCALE:1/2" = 1'-0" ARCH. REF: 2/A707

REVISIONS	#

SEROTONIN St. Petersburg

DESCRIPTION
NURSE STATION / DISPENSARY

HEIRLOOMDESIGNGROUP
VETERAN OWNED BUSINESS
2770 Apopka Blvd, Apopka, FL 32703
Ph: (407) 735-2242
Web: www.heirloomdesigngroup.com

CHECKED

DATE
01/09/24

SCALE
AS INDICATED

SHEET
103.1

LAMINATE SCHEDULE

PL-01	WILSONART / D354-60 / DESIGNER WHITE
PL-02	WILSONART / 8214 / PHANTOM CHARCOAL
PL-03	WILSONART / 6255 / POLISHED GOLD ALUMINUM
PL-04	WILSONART / 5010K-07 / DRAMA MARBLE
PL-05	WILSONART / Y0704-38 / CRIMINI WALNUT

SOLID SURFACE SCHEDULE

SS-01	MEGANITE / MT VANCOUVER / M002
SS-02	MEGANITE / ENCHANTED ROCK
SS-03	CORIAN / ANTARTICA
SS-04	CORIAN / DESIGNER WHITE

HARDWARE SCHEDULE

H-1	Blum 105° concealed hinges
H-2	Knapp & Vogt Spoon Pins
H-3	Richelieu / BP8160128160 / Satin Brass / 6 3/8"
H-4	Pro Series 100 full extension slides
H-5	Richelieu /61432171 /Stainless Steel grommet
H-6	Rev-A-Shelf / RV-814PB-11-5 / Pull Out / White
H-7	Blum Push To Open Mechanism
H-8	Richelieu / 9004430 / White Grommet
H-9	Richelieu / 9004490 / Black Grommet
H-10	Mockett / B-2620 / Oval Grommet White
H-11	Rev-A-Shelf / RV-15PB-2-S / Pull Out / White
H-12	File Hanging System FOR Wood Drawers
H-13	Cabinet Locks
H-14	Black Metal 1" Pipe and Flange

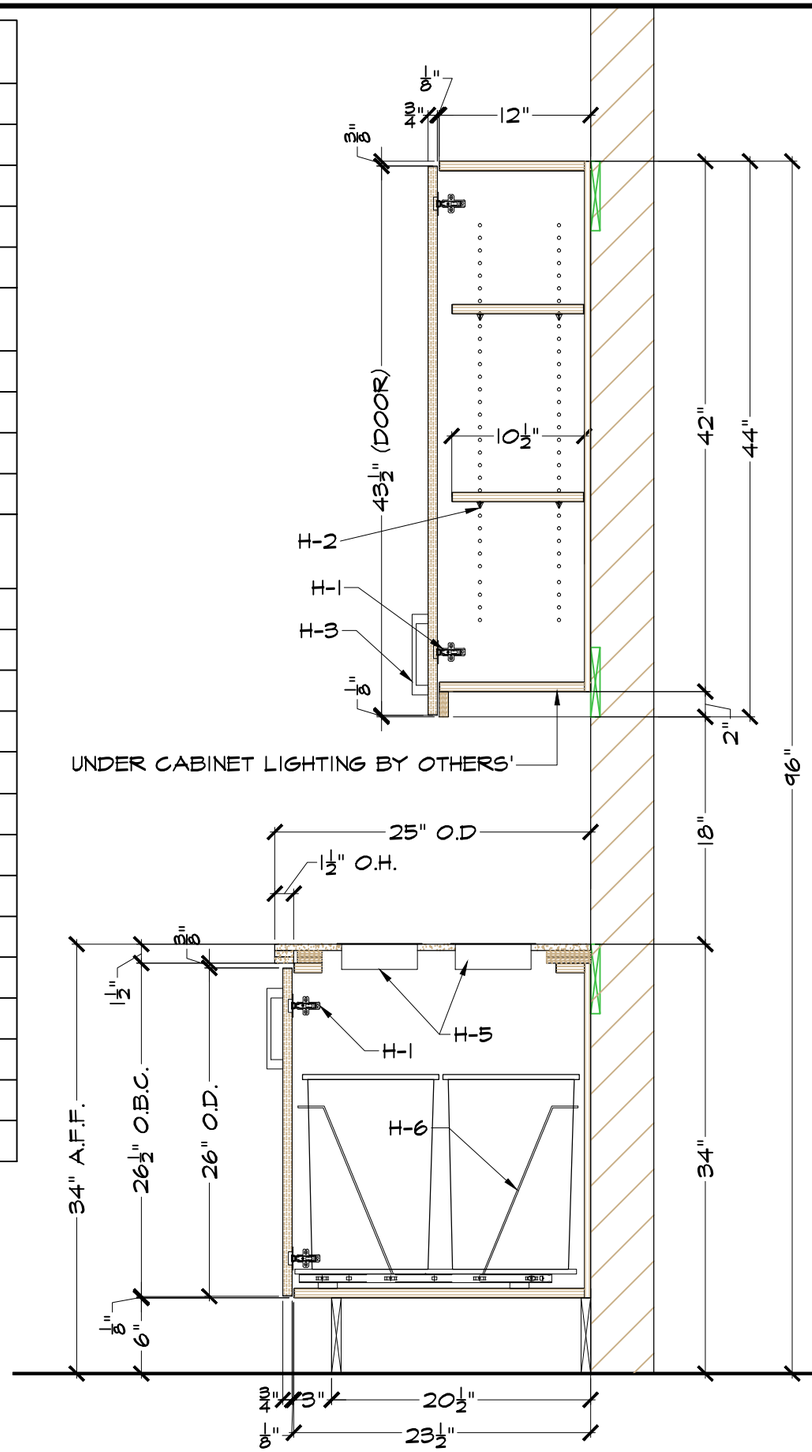

16 SECTION
SCALE: 1" = 1'-0" ARCH. REF: N/A

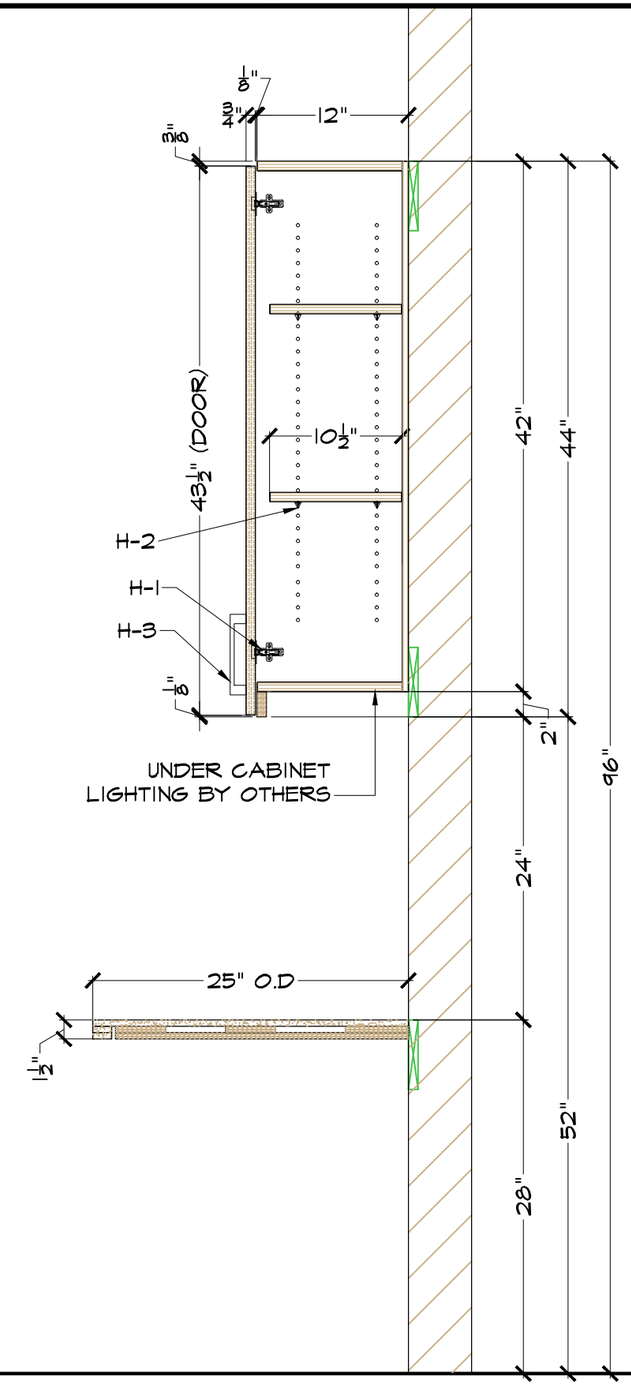

17 SECTION
SCALE: 1" = 1'-0" ARCH. REF: N/A

REVISIONS #

SEROTONIN St. Petersburg

DESCRIPTION
SECTIONS AND DETAILS

HEIRLOOM DESIGN GROUP

VETERAN OWNED BUSINESS

2770 Apopka Blvd, Apopka, FL 32703
Ph: (407) 735-2242
Web: www.heirloomdesigngroup.com

CHECKED

DATE 01/09/24

SCALE AS INDICATED

SHEET 103.2

LAMINATE SCHEDULE	
PL-01	WILSONART / D354-60 / DESIGNER WHITE
PL-02	WILSONART / 8214 / PHANTOM CHARCOAL
PL-03	WILSONART / 6255 / POLISHED GOLD ALUMINUM
PL-04	WILSONART / 5010K-07 / DRAMA MARBLE
PL-05	WILSONART / Y0704-38 / CRIMINI WALNUT
SOLID SURFACE SCHEDULE	
SS-01	MEGANITE / MT VANCOUVER / M002
SS-02	MEGANITE / ENCHANTED ROCK
SS-03	CORIAN / ANTARTICA
SS-04	CORIAN / DESIGNER WHITE
HARDWARE SCHEDULE	
H-1	Blum 105° concealed hinges
H-2	Knapp & Vogt Spoon Pins
H-3	Richelieu / BP8160128160 / Satin Brass / 6 3/8"
H-4	Pro Series 100 full extension slides
H-5	Richelieu /61432171 /Stainless Steel grommet
H-6	Rev-A-Shelf / RV-814PB-11-5 / Pull Out / White
H-7	Blum Push To Open Mechanism
H-8	Richelieu / 9004430 / White Grommet
H-9	Richelieu / 9004490 / Black Grommet
H-10	Mockett / B-2620 / Oval Grommet White
H-11	Rev-A-Shelf / RV-15PB-2-S / Pull Out / White
H-12	File Hanging System FOR Wood Drawers
H-13	Cabinet Locks
H-14	Black Metal 1" Pipe and Flange

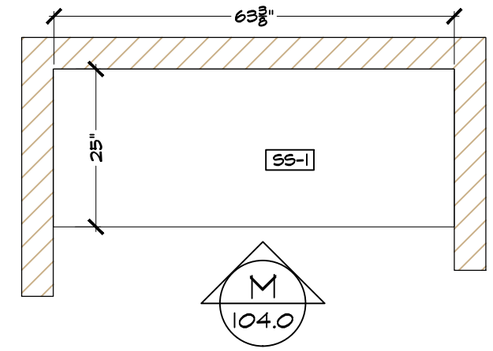

BLOOD DRAW ROOM
SCALE:1/2" = 1'-0" ARCH. REF: 1/707.1

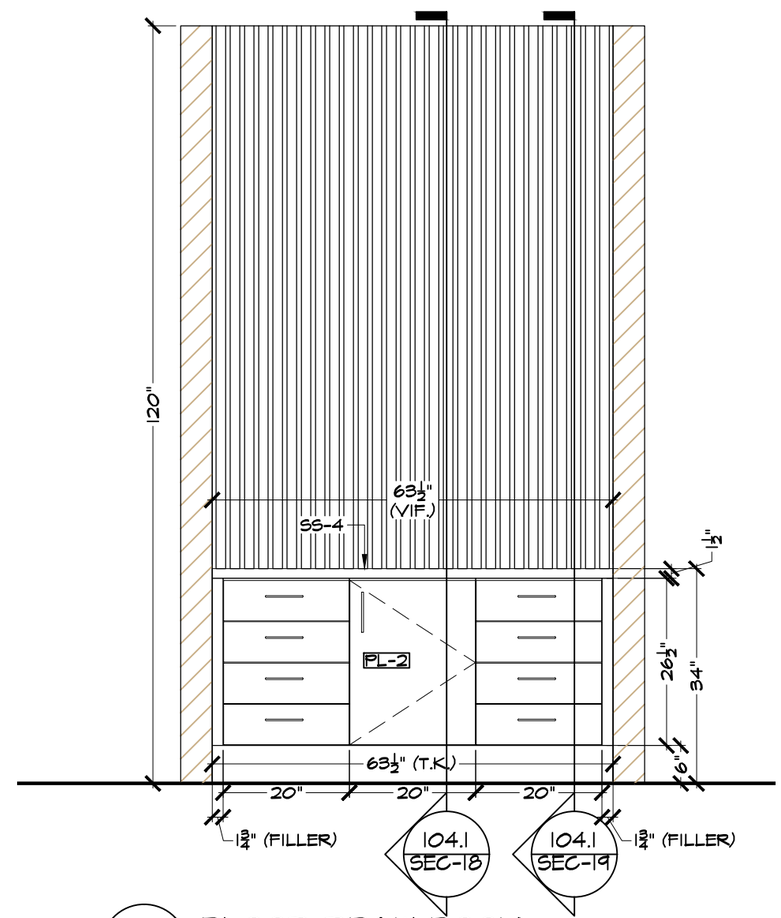

M BLOOD DRAW ROOM
SCALE:1/2" = 1'-0" ARCH. REF: 2/A707.1

REVISIONS	#

SEROTONIN St. Petersburg

DESCRIPTION
BLOOD DRAW

HEIRLOOMDESIGNGROUP
VETERAN OWNED BUSINESS
2770 Apopka Blvd, Apopka, FL 32703
Ph: (407) 735-2242
Web: www.heirloomdesigngroup.com

CHECKED
DATE 01/09/24
SCALE AS INDICATED
SHEET 104.0

LAMINATE SCHEDULE

PL-01	WILSONART / D354-60 / DESIGNER WHITE
PL-02	WILSONART / 8214 / PHANTOM CHARCOAL
PL-03	WILSONART / 6255 / POLISHED GOLD ALUMINUM
PL-04	WILSONART / 5010K-07 / DRAMA MARBLE
PL-05	WILSONART / Y0704-38 / CRIMINI WALNUT

SOLID SURFACE SCHEDULE

SS-01	MEGANITE / MT VANCOUVER / M002
SS-02	MEGANITE / ENCHANTED ROCK
SS-03	CORIAN / ANTARTICA
SS-04	CORIAN / DESIGNER WHITE

HARDWARE SCHEDULE

H-1	Blum 105° concealed hinges
H-2	Knapp & Vogt Spoon Pins
H-3	Richelieu / BP8160128160 / Satin Brass / 6 3/8"
H-4	Pro Series 100 full extension slides
H-5	Richelieu /61432171 /Stainless Steel grommet
H-6	Rev-A-Shelf / RV-814PB-11-5 / Pull Out / White
H-7	Blum Push To Open Mechanism
H-8	Richelieu / 9004430 / White Grommet
H-9	Richelieu / 9004490 / Black Grommet
H-10	Mockett / B-2620 / Oval Grommet White
H-11	Rev-A-Shelf / RV-15PB-2-S / Pull Out / White
H-12	File Hanging System FOR Wood Drawers
H-13	Cabinet Locks
H-14	Black Metal 1" Pipe and Flange

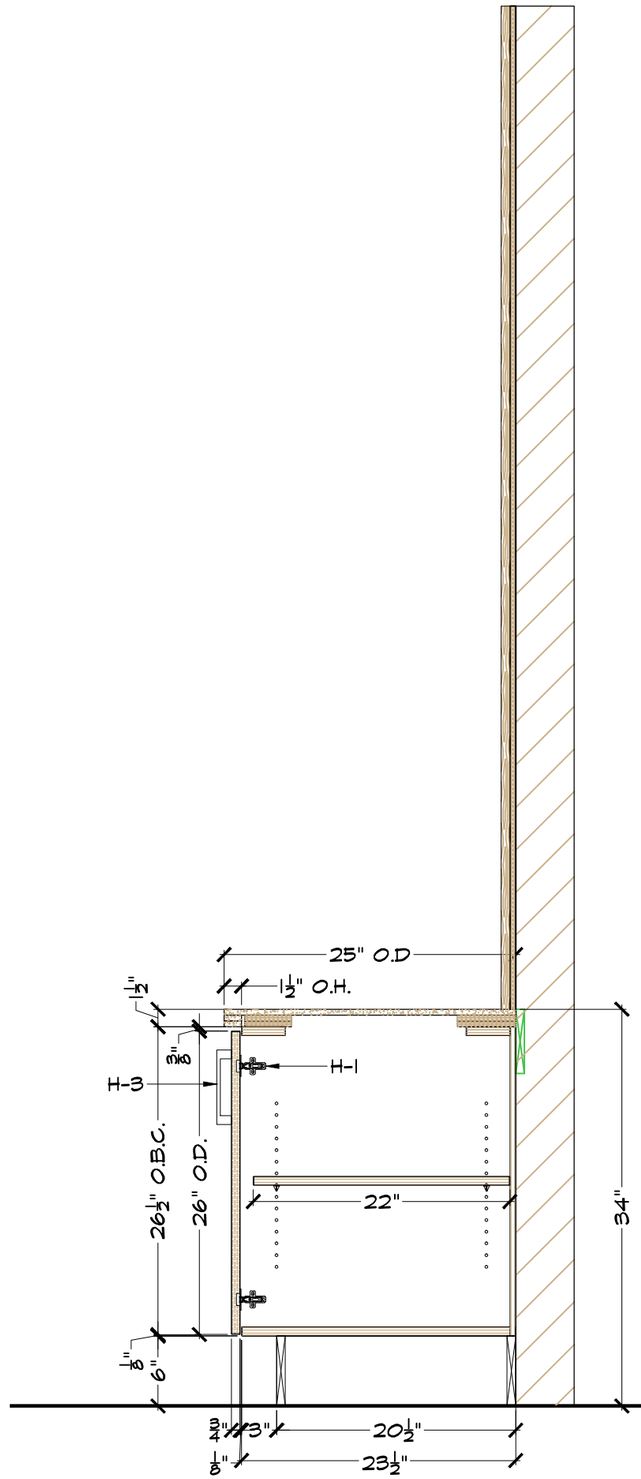

18 SECTION
SCALE:1" = 1'-0" ARCH. REF: N/A

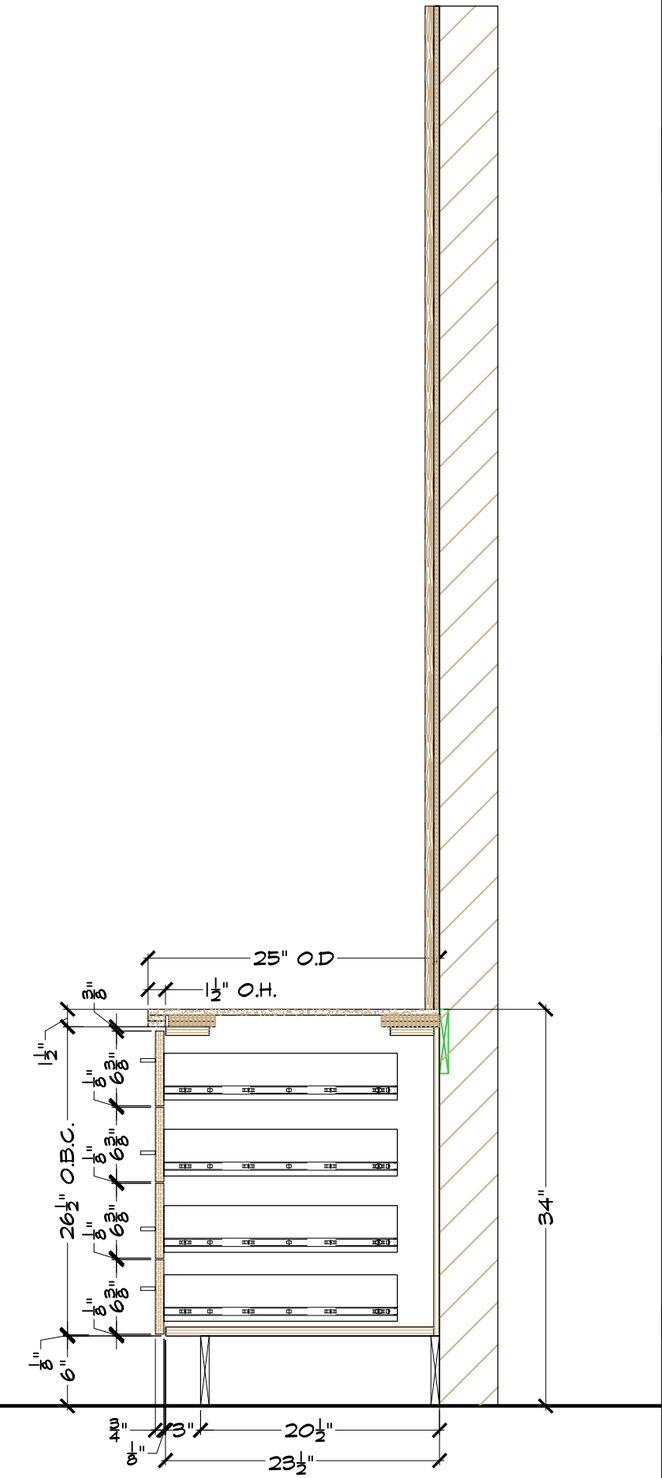

19 SECTION
SCALE:1" = 1'-0" ARCH. REF: N/A

REVISIONS	#

SEROTONIN St. Petersburg

DESCRIPTION
SECTIONS AND DETAILS

HEIRLOOMDESIGNGROUP
VETERAN OWNED BUSINESS
2770 Apopka Blvd, Apopka, FL 32703
Ph: (407) 735-2242
Web: www.heirloomdesigngroup.com

CHECKED

DATE 01/09/24

SCALE AS INDICATED

SHEET 104.1

LAMINATE SCHEDULE

PL-01	WILSONART / D354-60 / DESIGNER WHITE
PL-02	WILSONART / 8214 / PHANTOM CHARCOAL
PL-03	WILSONART / 6255 / POLISHED GOLD ALUMINUM
PL-04	WILSONART / 5010K-07 / DRAMA MARBLE
PL-05	WILSONART / Y0704-38 / CRIMINI WALNUT

SOLID SURFACE SCHEDULE

SS-01	MEGANITE / MT VANCOUVER / M002
SS-02	MEGANITE / ENCHANTED ROCK
SS-03	CORIAN / ANTARTICA
SS-04	CORIAN / DESIGNER WHITE

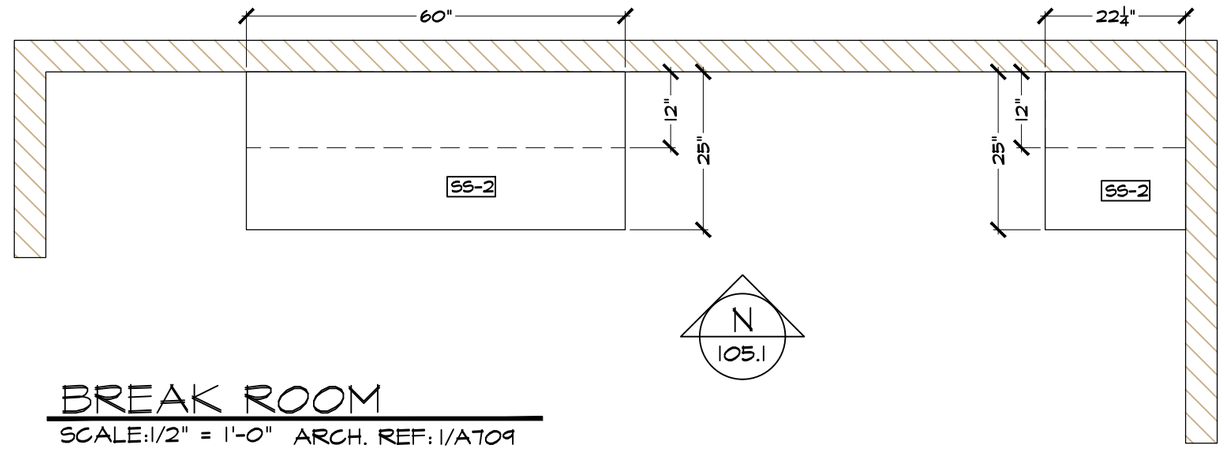

BREAK ROOM
SCALE:1/2" = 1'-0" ARCH. REF: 1/A709

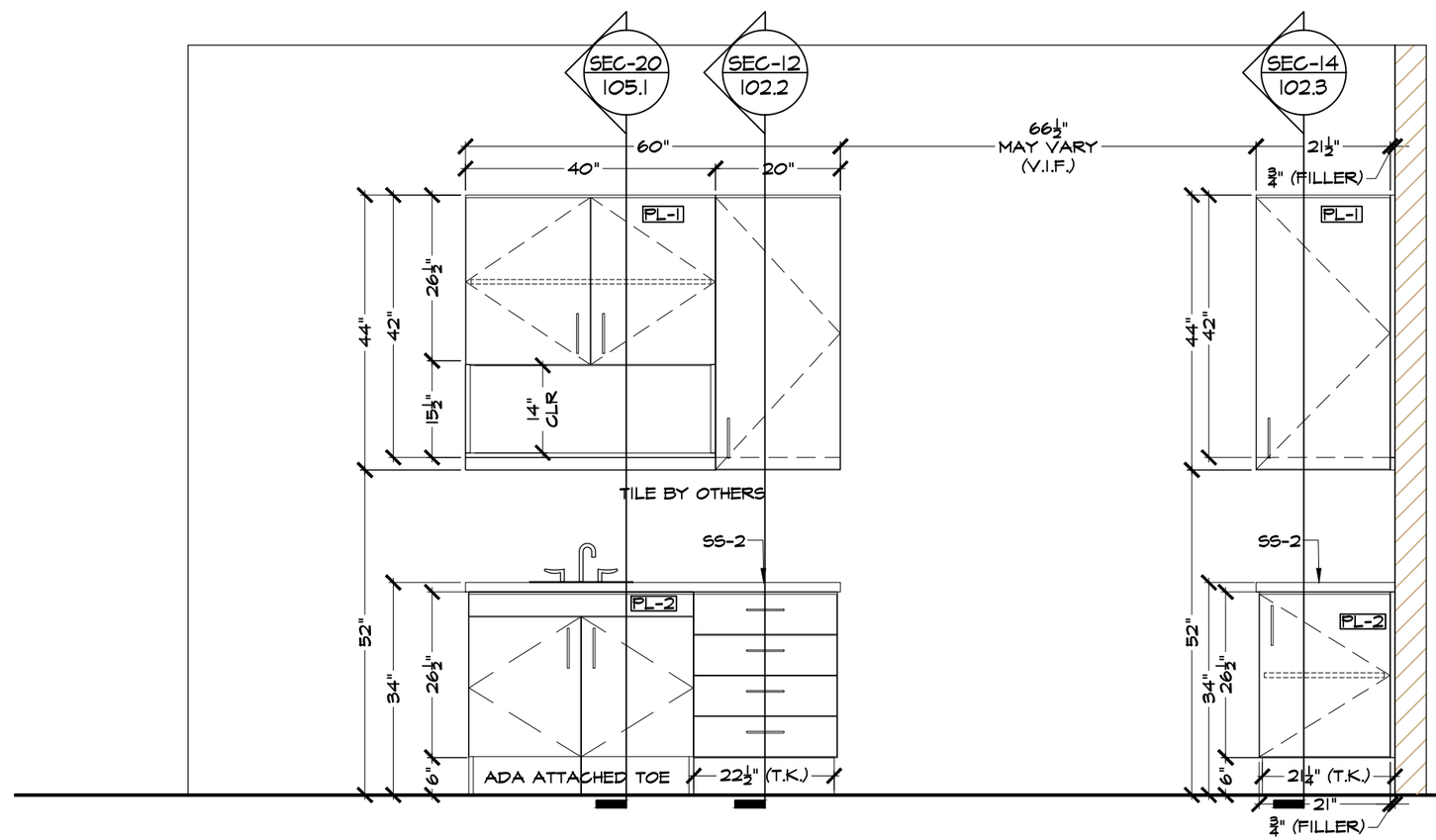

N
BREAK ROOM
SCALE:1/2" = 1'-0" ARCH. REF: 4/A709

REVISIONS	#

SEROTONIN St. Petersburg

DESCRIPTION
BREAK ROOM

HEIRLOOMDESIGNGROUP

VETERAN **OWNED** BUSINESS

2770 Apopka Blvd, Apopka, FL 32703
Ph: (407) 735-2242
Web: www.heirloomdesigngroup.com

CHECKED

DATE
01/09/24

SCALE
AS INDICATED

SHEET
105.0

LAMINATE SCHEDULE

PL-01	WILSONART / D354-60 / DESIGNER WHITE
PL-02	WILSONART / 8214 / PHANTOM CHARCOAL
PL-03	WILSONART / 6255 / POLISHED GOLD ALUMINUM
PL-04	WILSONART / 5010K-07 / DRAMA MARBLE
PL-05	WILSONART / Y0704-38 / CRIMINI WALNUT

SOLID SURFACE SCHEDULE

SS-01	MEGANITE / MT VANCOUVER / M002
SS-02	MEGANITE / ENCHANTED ROCK
SS-03	CORIAN / ANTARTICA
SS-04	CORIAN / DESIGNER WHITE

HARDWARE SCHEDULE

H-1	Blum 105° concealed hinges
H-2	Knapp & Vogt Spoon Pins
H-3	Richelieu / BP8160128160 / Satin Brass / 6 3/8"
H-4	Pro Series 100 full extension slides
H-5	Richelieu /61432171 /Stainless Steel grommet
H-6	Rev-A-Shelf / RV-814PB-11-5 / Pull Out / White
H-7	Blum Push To Open Mechanism
H-8	Richelieu / 9004430 / White Grommet
H-9	Richelieu / 9004490 / Black Grommet
H-10	Mockett / B-2620 / Oval Grommet White
H-11	Rev-A-Shelf / RV-15PB-2-S / Pull Out / White
H-12	File Hanging System FOR Wood Drawers
H-13	Cabinet Locks
H-14	Black Metal 1" Pipe and Flange

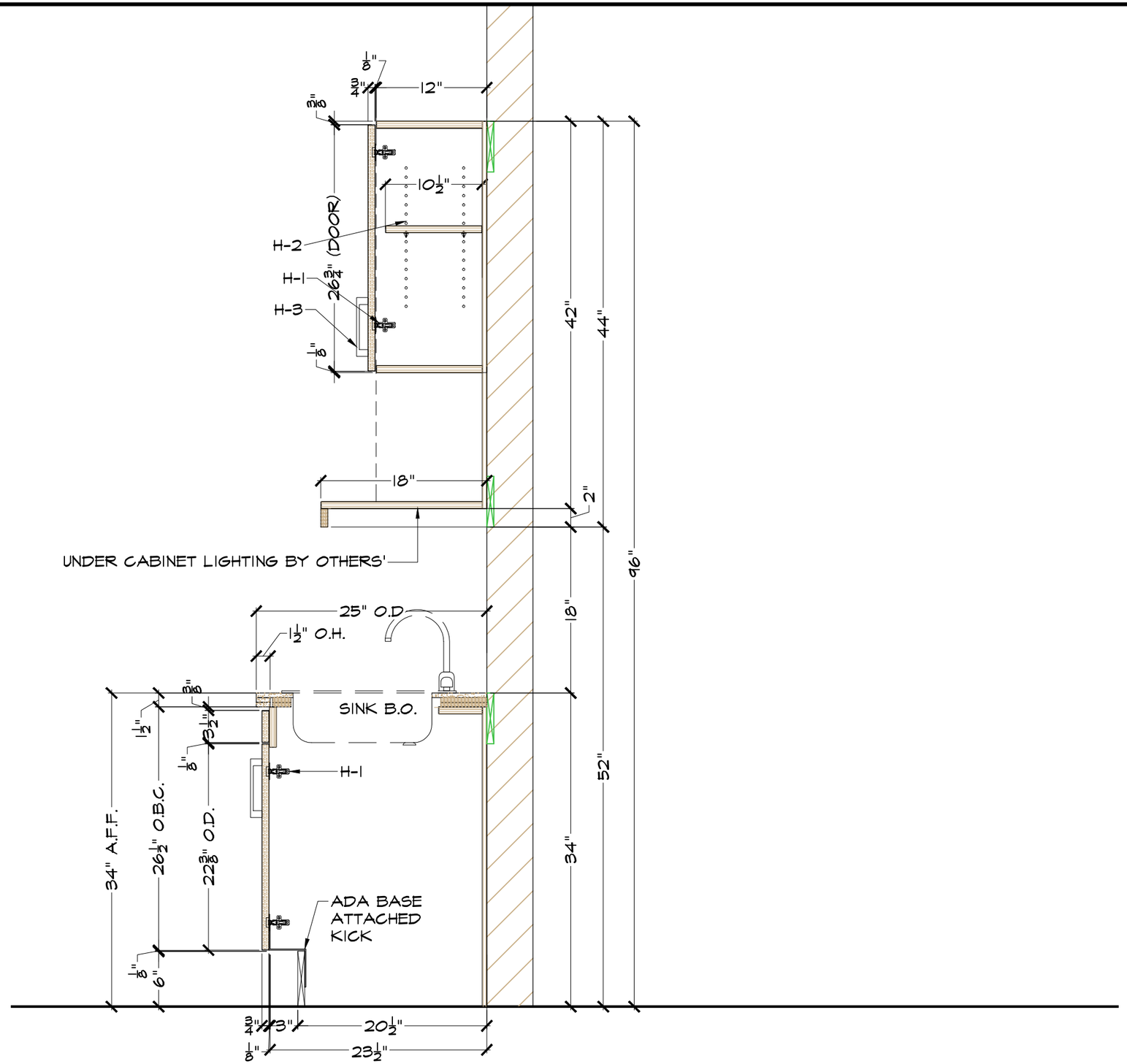

20 SECTION
SCALE: 1" = 1'-0" ARCH. REF: N/A

REVISIONS #

SEROTONIN St. Petersburg

DESCRIPTION
SECTIONS AND DETAILS

HEIRLOOMDESIGNGROUP
VETERAN OWNED BUSINESS
2770 Apopka Blvd, Apopka, FL 32703
Ph: (407) 735-2242
Web: www.heirloomdesigngroup.com

CHECKED

DATE 01/09/24

SCALE AS INDICATED

SHEET 105.1

HARDWARE SCHEDULE

H-1	Blum 105° concealed hinges
H-2	Knapp & Vogt Spoon Pins
H-3	Richelieu / BP8160128160 / Satin Brass / 6 3/8"
H-4	Pro Series 100 full extension slides
H-5	Richelieu /61432171 /Stainless Steel grommet
H-6	Rev-A-Shelf / RV-814PB-11-5 / Pull Out / White
H-7	Blum Push To Open Mechanism
H-8	Richelieu / 9004430 / White Grommet
H-9	Richelieu / 9004490 / Black Grommet
H-10	Mockett / B-2620 / Oval Grommet White
H-11	Rev-A-Shelf / RV-15PB-2-S / Pull Out / White
H-12	File Hanging System FOR Wood Drawers
H-13	Cabinet Locks
H-14	Black Metal 1" Pipe and Flange

LAMINATE SCHEDULE

PL-01	WILSONART / D354-60 / DESIGNER WHITE
PL-02	WILSONART / 8214 / PHANTOM CHARCOAL
PL-03	WILSONART / 6255 / POLISHED GOLD ALUMINUM
PL-04	WILSONART / 5010K-07 / DRAMA MARBLE
PL-05	WILSONART / Y0704-38 / CRIMINI WALNUT

SOLID SURFACE SCHEDULE

SS-01	MEGANITE / MT VANCOUVER / M002
SS-02	MEGANITE / ENCHANTED ROCK
SS-03	CORIAN / ANTARTICA
SS-04	CORIAN / DESIGNER WHITE

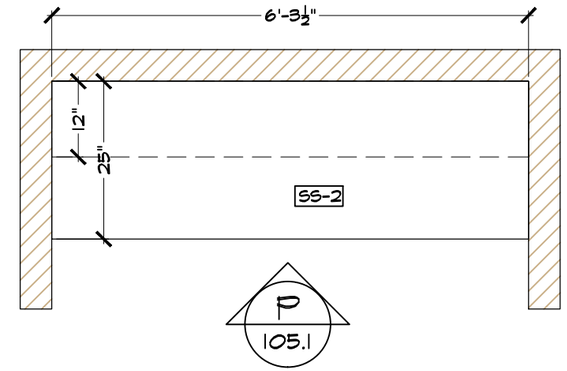

CONFERENCE ROOM
SCALE:1/2" = 1'-0" ARCH. REF: 1/A710

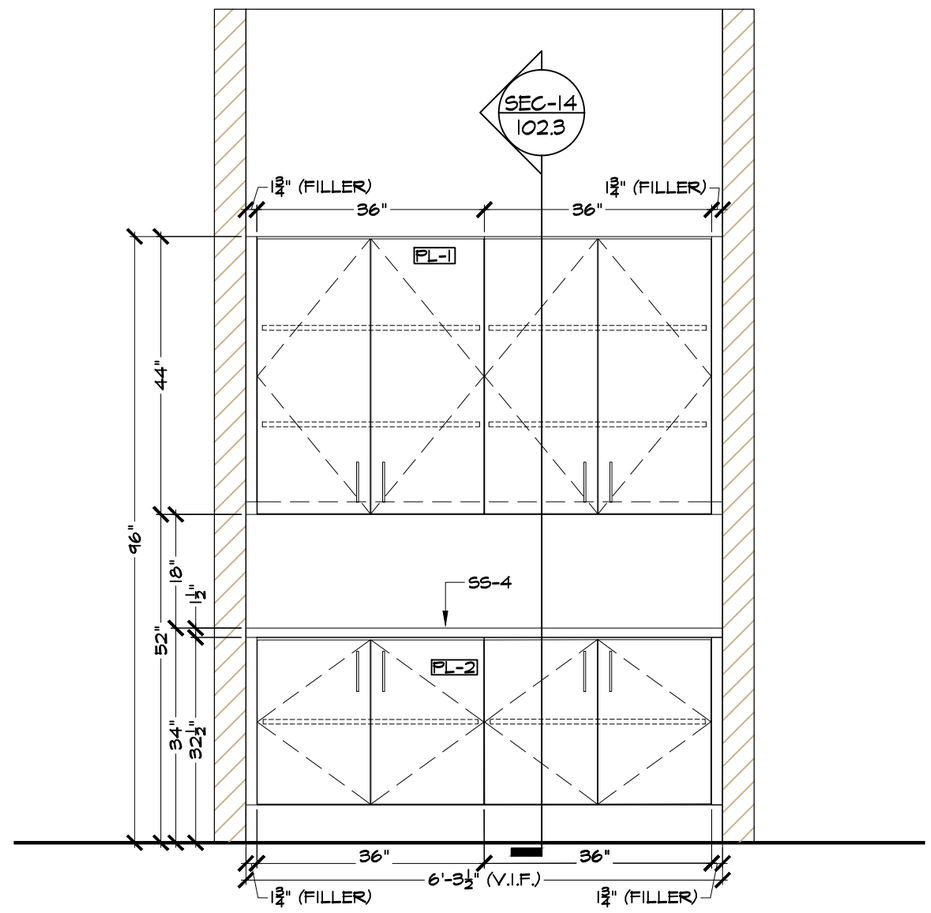

P CONFERENCE ROOM
SCALE:1/2" = 1'-0" ARCH. REF: 2/A710

REVISIONS	#

SEROTONIN St. Petersburg

DESCRIPTION
CONFERENCE ROOM

HEIRLOOMDESIGNGROUP
VETERAN OWNED BUSINESS
2770 Apopka Blvd, Apopka, FL 32703
Ph: (407) 735-2242
Web: www.heirloomdesigngroup.com

CHECKED

DATE
01/09/24

SCALE
AS INDICATED

SHEET
106.0

HARDWARE SCHEDULE

H-1	Blum 105° concealed hinges
H-2	Knapp & Vogt Spoon Pins
H-3	Richelieu / BP8160128160 / Satin Brass / 6 3/8"
H-4	Pro Series 100 full extension slides
H-5	Richelieu /61432171 /Stainless Steel grommet
H-6	Rev-A-Shelf / RV-814PB-11-5 / Pull Out / White
H-7	Blum Push To Open Mechanism
H-8	Richelieu / 9004430 / White Grommet
H-9	Richelieu / 9004490 / Black Grommet
H-10	Mockett / B-2620 / Oval Grommet White
H-11	Rev-A-Shelf / RV-15PB-2-S / Pull Out / White
H-12	File Hanging System FOR Wood Drawers
H-13	Cabinet Locks
H-14	Black Metal 1" Pipe and Flange

LAMINATE SCHEDULE

PL-01	WILSONART / D354-60 / DESIGNER WHITE
PL-02	WILSONART / 8214 / PHANTOM CHARCOAL
PL-03	WILSONART / 6255 / POLISHED GOLD ALUMINUM
PL-04	WILSONART / 5010K-07 / DRAMA MARBLE
PL-05	WILSONART / Y0704-38 / CRIMINI WALNUT

SOLID SURFACE SCHEDULE

SS-01	MEGANITE / MT VANCOUVER / M002
SS-02	MEGANITE / ENCHANTED ROCK
SS-03	CORIAN / ANTARTICA
SS-04	CORIAN / DESIGNER WHITE

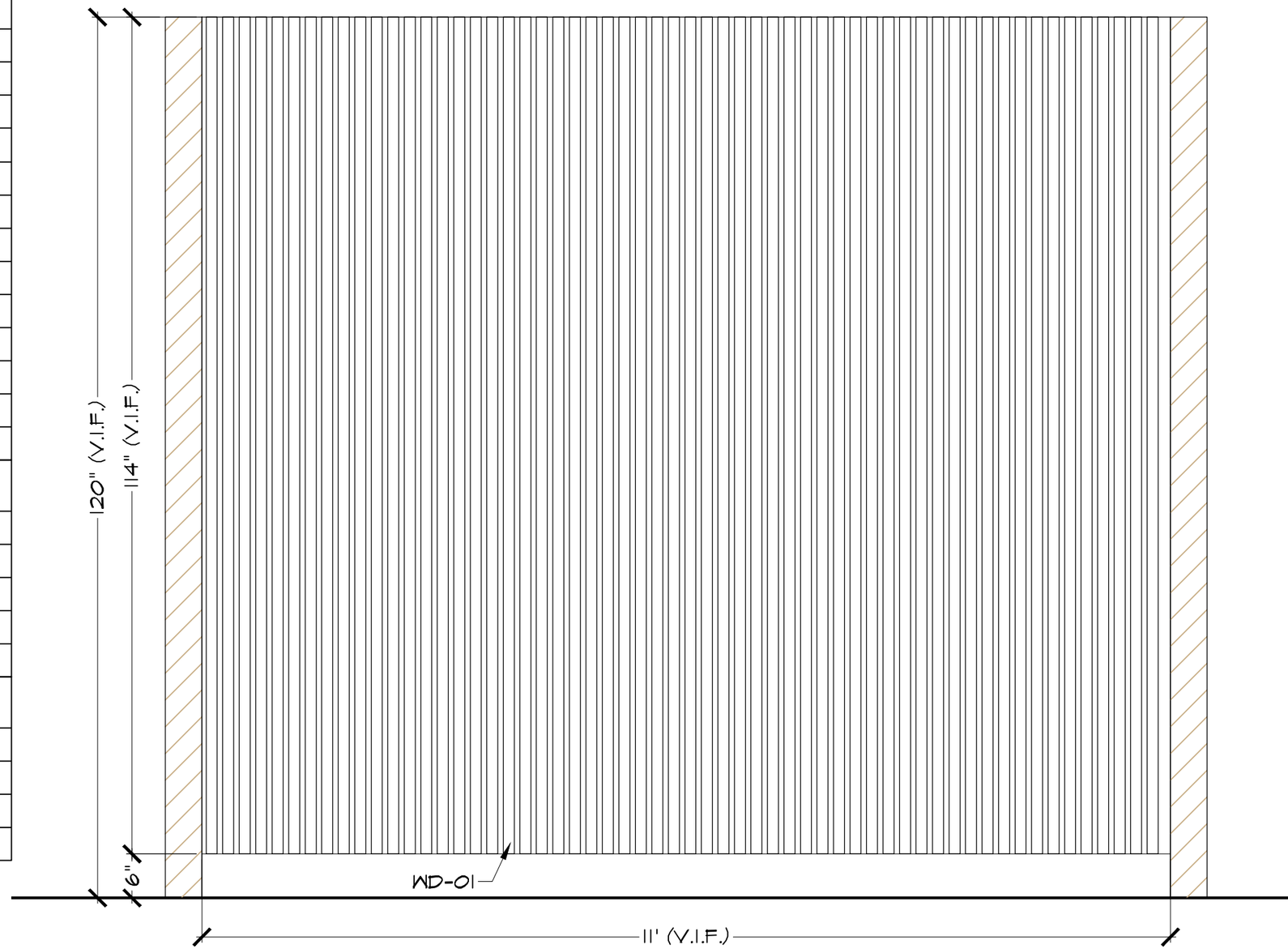

IV THERAPY

SCALE: 1/2" = 1'-0" ARCH. REF: 3/A705

REVISIONS	#

SEROTONIN St. Petersburg

DESCRIPTION
I.V. THERAPY

HEIRLOOMDESIGNGROUP
VETERAN OWNED BUSINESS
2770 Apopka Blvd, Apopka, FL 32703
Ph: (407) 735-2242
Web: www.heirloomdesigngroup.com

CHECKED

DATE 01/09/24

SCALE AS INDICATED

SHEET 107.0